Dublin Institute of Technology
ARROW@DIT

Conference papers

School of Electrical and Electronic Engineering

2011-09-01

A Review of Parallel Operation of Active Power Filters in the Distributed Generation System

Shafiuzzaman Khan Khadem
skkhadem@gmail.com

Malabika Basu
Dublin Institute of Technology

Michael F. Conlon
Dublin Institute of Technology

Follow this and additional works at: http://arrow.dit.ie/engscheleart

Part of the Electrical and Electronics Commons, Industrial Technology Commons, and the Power and Energy Commons

Recommended Citation

Khadem, Shafiuzzaman K; Basu, Malabika; Conlon, Michael F; , "A review of parallel operation of active power filters in the distributed generation system," Power Electronics and Applications (EPE 2011), Proceedings of the 2011-14th European Conference on , vol., no., pp.1-10, Aug. 30 2011-Sept. 1 2011

This Conference Paper is brought to you for free and open access by the School of Electrical and Electronic Engineering at ARROW@DIT. It has been accepted for inclusion in Conference papers by an authorized administrator of ARROW@DIT. For more information, please contact yvonne.desmond@dit.ie, arrow.admin@dit.ie.

A Review of Parallel Operation of Active Power Filters in the Distributed Generation System

Shafiuzzaman K Khadem, *Student Member, IEEE*, Malabika Basu, *Member, IEEE* and Michael F Conlon, *Member, IEEE*
School of Electrical Engineering Systems, Dublin Institute of Technology
Kevin Street, Dublin 8, Ireland
Tel: +353-1-4022814
Email: skkhadem@gmail.com, mbasu@ieee.org, michael.conlon@dit.ie

Keywords

Active Power Filter, Parallel Operation, Distributed Generation System, Power Quality

Abstract

In this paper a technical review of parallel operation of Active Power Filter (APF) for harmonic power compensation in distributed generation (DG) network has been presented. Controlling methods and connection topologies with their pros and cons are described. Recent improvements in controlling and future trends for the application of APFs in distributed mode are also identified.

I. Introduction

It is now more common to have grid connected inverters facilitating distributed generation (DG) or in microgrid systems. In some cases, grid connected inverters may extend the energy availability, increase the energy security and improve the system reliability. The power quality, at all time, is a matter of concern. DG Inverters may introduce more harmonics into the grid. On the other hand, in microgrids or DG systems, number of non-linear, harmonics and sophisticated loads are increasing. Like inverters and UPS, APFs are finding greater applications as interfacing and compensating devices in the distributed generation system for power quality improvement as well as storing energy to work as a back-up UPS system during islanded mode of operation. The power rating and switching frequency of APF converters are determined by the magnitude of harmonic currents and required filter bandwidth. In high power applications, the filtering task cannot be performed for the whole spectrum of harmonics by using a single converter due to the limitations on switching frequency and power rating of the semiconductor devices. Therefore, compensating the reactive harmonic components to improve the power quality of the DG integrated system as well as to avoid the large capacity centralised APF, parallel operation of multiple low power APF units are increasing. Different controlling mechanism and topologies are available in handling the difficulties of parallel operation of APFs either in active load sharing or distributed mode. Though the harmonic current compensation is the primary function of parallel APF, they can also be used as a compensator for voltage harmonics. Thus, the controlling of parallel APF for voltage harmonic compensation in a distribution line is another important issue. Therefore, a technical review on parallel operation of APF for current and voltage harmonic compensation in a distributed generation (DG) network will be very useful.

II. Control Strategies

A. Harmonic Current Compensation

The concept and a design analysis with experimental validation of a multi-module parallelable three-phase active power filter (centre mode) has been proposed first in [1] to solve the problems of capacity enlargement and load unbalance compensation encountered by the shunt APF with a three-arm topology. But the disadvantage of the proposed method was that the malfunction of any inverter will cause erroneous compensation due to the generation of a current command which is not independent

of other inverters. Therefore another proposal was made by the same author in [2] with a capacity limitation technique. In that case, APFs are connected in a cascade mode which shows the advantages of high flexibility, reliability due to no control interconnection and reduced power capacity demand of APFs. But the disadvantage was that one APF treats other APFs on its load side as a part of its load. The third approach has been proposed in [3] which is based on power splitting. An overview of these techniques has been given below. The advantages and disadvantages of these techniques are also described later on. Broadly, three controlling strategies have been developed for active load sharing condition where inter-communication of the APFs is a must. These are;

A1. Frequency Splitting (FS) / Centre Mode Control (CMC)

A central control unit is used to measure the total harmonic components and then each APF is assigned to compensate a specific harmonic component. Therefore it requires the minimum number of harmonic detection sensors, shown in Figure 1(a). It can also be referred as concentrated control. The technique for reference current generation has been presented in Figure 1(b). If the sensing load current is i_L then the harmonic current will be, $i_{Lh} = i_L - i_{L1}$ where i_{L1} is the fundamental component of the load current and h is the number of harmonic components. In this mode, if there are 2 APFs working in parallel and one is responsible for reactive power compensation, then the other one will compensate the harmonics [4, 5].

The operational advantage is that the APF module which deals with the higher order harmonics should have the higher switching frequency. Since the harmonic current magnitude is inversely proportional to the harmonic order, the power rating is low. Thus it also helps to reduce the switching losses. The main disadvantage is that the APF modules are not identical and therefore replacement requires a similar one.

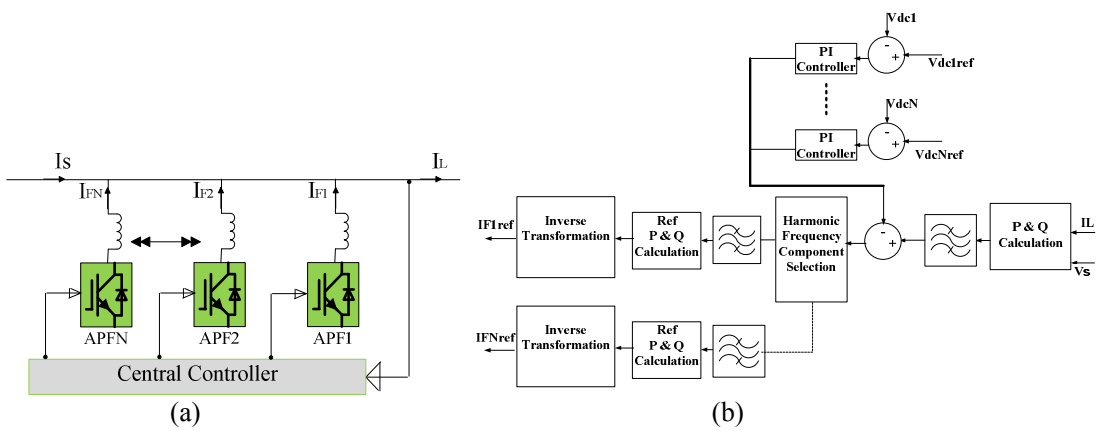

Fig. 1 – a) Centre Mode Control Technique; b) Reference Current Generation technique for Frequency Splitting Control

A2. Power Splitting (PS) / Distributed Control (DC)

In this case, compensating total harmonic current is equally distributed to the APFs and therefore identical modules are required. If there are N modules operating then the current reference of each module will be,

$$I_{FN} = {i_{Lh}}/{N} \tag{1}$$

Since it maintains interconnection between the inverters, number of sensors are also higher than the central control mode, shown in Figure 2(a). The reference current generation technique has been depicted in –Figure 2(b). The main advantage is its easy maintenance and installation.

It is clear that in both central and distributed control system, the reference current of each APF are resulting from the same P&Q calculating algorithm block and therefore all the APFs maintain

interconnection control. Hence a fault in any communication or malfunctioning of any APF can cause the system halt.

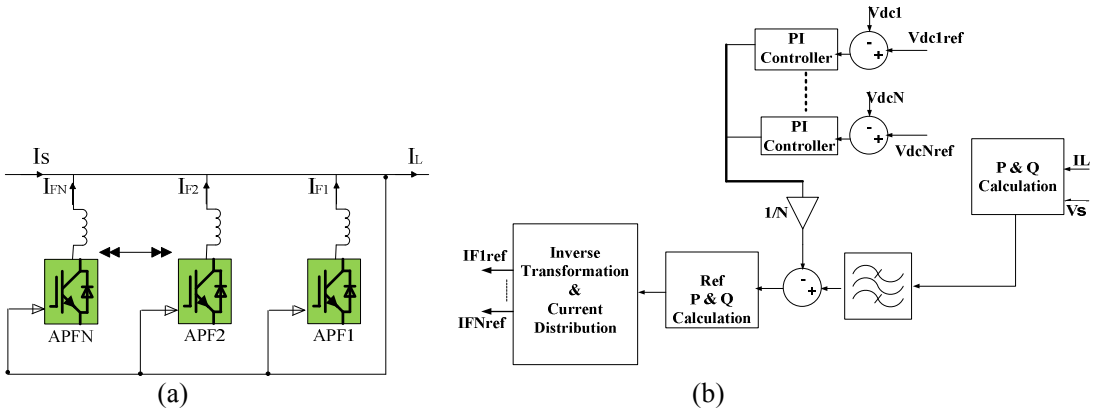

Fig. 2 – a) Distributed Control Technique; b) Reference Current Generation technique for Power Splitting Control

A3. Capacity Limitation Control (CLC) / Master – Slave Control (MSC)

In this mode, each APF compensates harmonic current according to its power rating. Each APF are independent and sense the current at the up / downstream of the node and therefore the maximum number of sensor are required, Figure 3(a). Each APF only has to compensate the harmonic component left by the previous APF on its load side. Therefore generation of reference current for each APF requires separate P&Q calculation as shown in Figure 3(b). The rating of each APF module is defined as;

$$P = \frac{\sqrt{3}}{2} V_{dc} I_{F\max} \tag{2}$$

In general, APF near the load has higher capacity and the lowest bandwidth. As the APFs are not identical and work independently therefore power capacity enlargement is easier and the system reliability is also high. Also there is no central controlling and no information sharing between the APFs. Poor dynamic characteristic is the main disadvantage of this mode. But for steady-state condition, CLC and PS show a better performance than the FS [6]

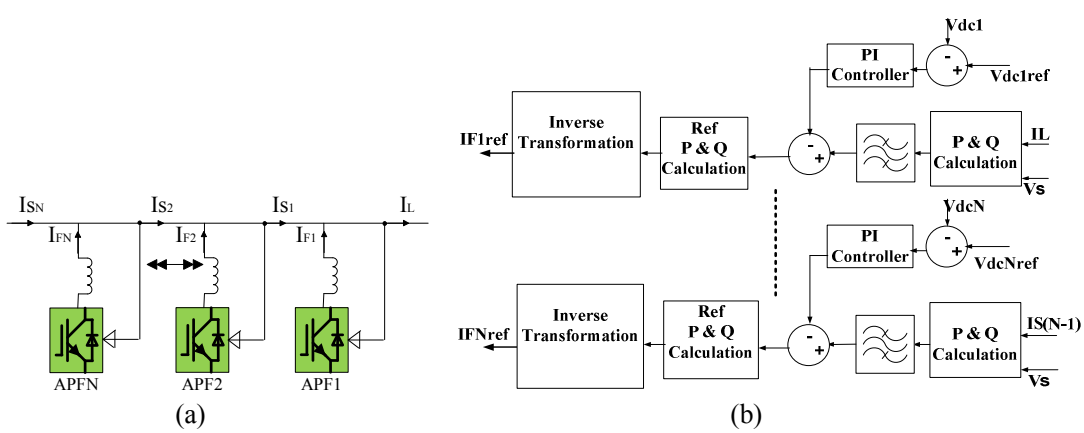

Fig. 3 – a) Capacity Limitation Control Technique; b) Reference Current Generation technique for Capacity limitation control

A new modular based APF controlled strategy with a combination of central control and master-slave mode has been proposed in [7] where each APF can operate independently and compensate the load harmonic current according to its own capacity-limitation. The output current of each APF is optimized in such a way that the APF with large capacity compensates more current and the one with

small capacity compensates less current. In this way, the feasibility and security of modular APF can be guaranteed. Figure 4 shows the new control strategy where the total harmonic compensating current, $I_F = I_{F1} + I_{F2} + \ldots + I_{FN}$. Here,

$$I_{F1} = K_1 I_F ; I_{F2} = K_2 I_F ; \ldots\ldots\ldots ; I_{FN} = K_N I_F \tag{3}$$

and $$K_N = \frac{I_{rN}}{\sum_{j=1}^{N} I_{rj}} \frac{I_{rN}}{I_{FNref}} \tag{4}$$

where, I_r and I_{FNref} represent the rated current and the compensating current reference of the selected APF.

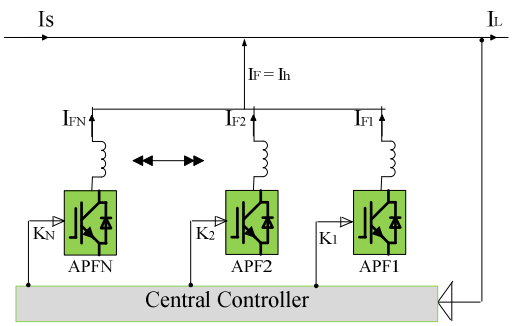

Fig 4 – Parallel operation of APF with a combination of central control and capacity limitation

Furthermore, a common dc link capacitor can be used for parallel inverters, shown in Figure 5, to reduce the system cost [8], but it then raises the hardware design and control complexity due to the zero sequence current circulation between the inverters [9].

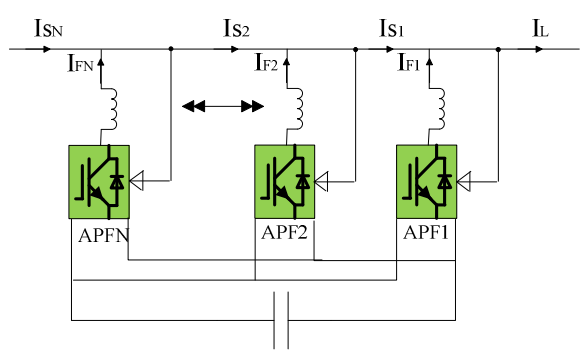

Fig 5 – parallel inverters with common dc link capacitor

Controlling strategies are applicable only for the active load sharing mode when multiple APFs are placed close to each other either at the point of common coupling or close to a large capacity load. When these APFs are working in different feeders or deal with individual loads, then no other controlling mechanism is needed even though they are seen to be in parallel operation [10].

Depending on the placement of the harmonic current sensor, there could be two types of harmonic compensation loops for duel shunt APF in parallel mode, either feedforward or feedback [9, 11, 12]. In general, feedforward topology is extensively used for its good stability characteristics and easy installation where the controlling method is based on a current-controlled source. On the other hand, feedback control is better for stationary conditions but become unstable during unknown grid conditions. A combination of both controllers for two parallel APF rather than a single unit shows a better compensating result for both low and high order harmonics and it also enhances stable grid operation [12]. A comparative analysis with advantages and disadvantages of these techniques with topologies has been presented in the Table 1.

A4. Droop Control

To work as a harmonic current compensator, the APF current should deal with the load voltage, V_L or voltage at the point of installation. In that case, the injected compensating current will be,

$$I_F = G_F . V_L \tag{5}$$

The droop relation will be based on the conductance and non-fundamental power, Q_{hF} of APF and this has been derived in [13];

$$G_F = G_0 + n_F . (Q_{hF} - Q_{hF0}) \tag{6}$$

where Q_{hF0} is the rated non-fundamental power of the APF. Non-fundamental power can be calculated as;

$$Q_{hF} = \sqrt{Q_F^2 - Q_{1F}^2} \tag{7}$$

$$Q_F = V_F . I_F \tag{8}$$

here, V_F is the output phase voltage of APF.

B. Voltage Harmonics Compensation

All the above approaches are for harmonic current compensation which is the primary function of parallel APF. Shunt APF can also be used as a compensator for voltage harmonics. Therefore, control of parallel APF for voltage harmonic compensation in a distribution line is another important issue. To detect the harmonic voltages, the active filter, here, is characterized by behaving like a resistor for harmonic frequencies [14 - 16]. A cooperative controller based on voltage THD is proposed in [17] for parallel operation of multiple APF in a radial distribution feeder. A radial power distribution system with active power filter for voltage harmonic mitigation is shown in Figure 6. The real-time communications among the APF units are required to coordinate the operations, which is overcome by introducing droop control method [18, 19].

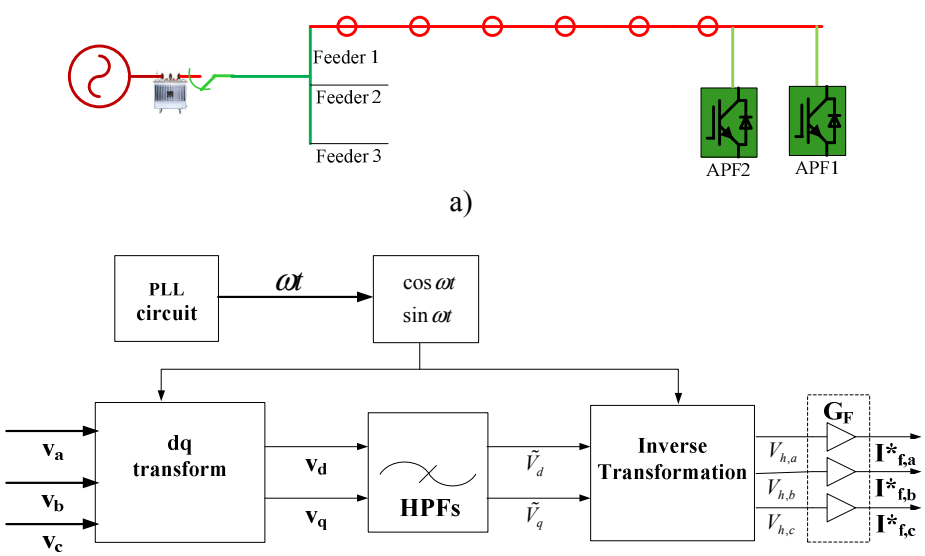

Fig. 6 – a) A radial power distribution system with active power filter; b) a simple control circuit of the shunt APF as a voltage harmonic compensator

Table 1: Comparative analysis of parallel APFs controlling scheme with topologies

Harmonic Compensation Loop	CS	Advantages	Disadvantages
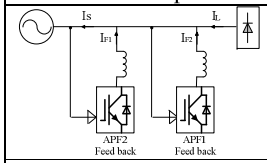	MSC	i. better transient response in steady state condition ii. reliable and redundant iii. compensate damping resonance (due to grid and filtering capacitor at the load side)	i. HDS - 4, thus increase the hardware complexity ii. unstable for unknown grid condition or voltage harmonic distortion
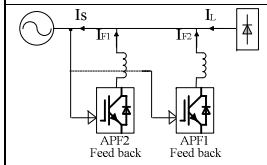	FS / PS	i. HDS - 3, thus reduces the hardware design complexity ii. reduce switching losses, if two inverters operate at different frequency iii. good for load sharing between the filters	i. design for reference current selection is critical; both inverters should be rated at same nominal power. ii. unstable for unknown grid condition iii. requires identical replacement
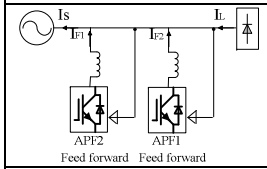	MSC	i. does not depend on grid condition or the voltage harmonic distortion ii. good stability	i. HDS - 4, thus increase the hardware complexity ii. load sharing between the filters is difficult
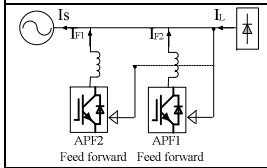	FS / PS	i. HDS - 3, thus reduces the hardware design complexity ii. easy maintenance and installation iii. good for load sharing between the filters	i. design for reference current selection is critical; both inverters should be rated at same nominal power.
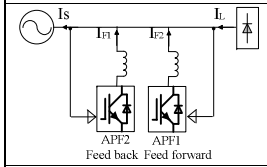	MSC	i. harmonic compensation is better than that of the above four configuration ii. good stability	i. HDS - 4, thus increase the hardware complexity
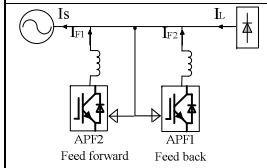	FS / PS / MSC	i. harmonic compensation is better then all other configurations. ii. HDS - 3, thus reduces the hardware design complexity iii. reduce the line current ripple if the inverters have the same switching frequency iv. good stability	i. redundancy is possible in load sharing mode but may not be cost-effective. ii. higher rated power for APF2 is required for load sharing condition

CS – Controlling Scheme; HDS – Harmonic Detection Sensors

B1. THD based Cooperative Control

The study in [15] shows that installation of an active or passive filter on a long-distance power distribution feeder may result in a certain phenomenon: voltage harmonics are mitigated at the point of installation, whereas they are magnified on other bus where no filter is connected and the phenomenon is termed as whack-a-mole. This voltage harmonic distortion can be damped by introducing an active filter at the end of radial feeder [15, 17, 18]. The active filter detects voltage harmonics, V_h at the point of installation, and then injects a compensating current, I_F as follows:

$$I_F = G_F . V_h \tag{9}$$

where G_F is the control gain / conductance of the active filter. An automatic gain adjustment was also proposed in [18] to damp out harmonic propagation without considering the circuit parameters of the distribution feeder.

The purpose of cooperative control is to reduce the values of voltage THD over balancing the compensating currents. At first, THD controller is used to lower the voltage THD at the installation bus of one active filter than a specified value. Then the current controller generates equal compensating currents for the APFs. Thus the cooperative controller makes a significant contribution to reduce the required current rating of each active filter. Figure 7 shows a block diagram of cooperative control to reduce the voltage THD.

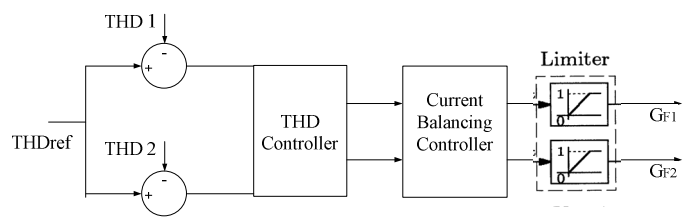

Fig. 7 – Block diagram of cooperative control

B2. Droop Control

It is already mentioned that droop characteristics relate the output phase angle of inverter with active power and the output phase voltage with reactive power flow. And the function of APF is to compensate harmonic load current. The APF can also be used to control voltage harmonics at the point of installation. Therefore, the droop control can be implemented for both purposes of APF. The basics of these controls are briefly described below;

Using a high pass filter (HPF), V_h can be extracted from the supply voltage and then I_{Fref} is generated. Final voltage command, V_F is calculated as [19] and the PWM then generates the corresponding gating signals.

$$V_F = \frac{L_F}{\Delta T}(I_{Fref} - I_F) + V_s \tag{10}$$

where L_F is the interfacing inductor and ΔT is the sampling period of the controller. A droop relationship between the G_F and the VA consumption, Q_F of the APF can be derived as;

$$G_F = G_0 + n_F.(Q_F - Q_{F0}) \tag{11}$$

where G_0 is the rated conductance, n_F is the slope of the droop equation and Q_{F0} is the rated capacity of the APF. The value of n_F is determined by the VA rating of the APF to ensure the sharing of filtering workload in proportion with the capacity of each APF. The droop relation between the G and Q is also depicted in Figure 8.

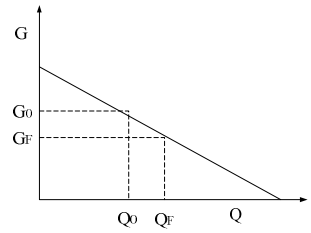

Fig 8 – Droop characteristics between G – Q

C. Droop control for multiple parallel APF

When multiple APFs with different ratings are used to compensate the reactive and harmonic components in a distributed environment then the controlling should be based on locally available information. In that case, the droop controller can be effectively used for harmonic voltage and current compensation which is similar to the adjustment of fundamental voltage amplitude and frequency. Here, the droop coefficient values have to be adjusted according to the following relationships [20, 21];

$$n_1.Q_{10} = n_2.Q_{20} ..... = n_i.Q_{i0} \tag{12}$$

The relation between the VA of the APF and rated capacity can also be expressed as [135];

$$\frac{Q_1}{Q_{10}} \approx \frac{Q_i}{Q_{i0}} \tag{13}$$

Using the droop characteristic to share the current of a certain harmonic frequency has also been presented in [21]. The main advantages of droop control for multiple parallel APFs is that it can be used either when the APFs are in placed at the point of installation [15, 17, 18] or in distributed mode with no interconnection between each others [13].

APFs in distributed mode can be termed as Distributed Active Filter System (DAFS). Figure 9 shows the DAFS system where multiples APFs are installed at different locations of the distribution line.

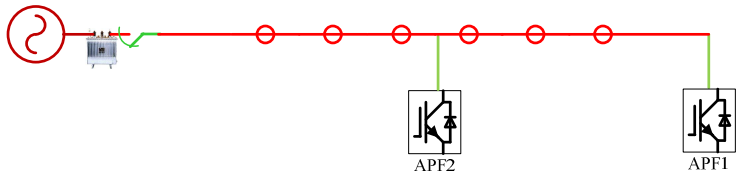

Fig 9 – Distributed APFs System

The filtering capacity of the APFs is further improved by introducing a dynamic tuning method in the DAFS [18], as shown on Figure 10, where the voltage THD at the installation point of each APFs is used to dynamically adjust the VA capacity and the slope of droop characteristic. Here, the APFs can dynamically adjust their filtering capability in response to increasing or decreasing of nonlinear loads in the system to maintain the voltage distortion at the allowable level. A discrete frequency tuning active filter is also proposed in [19] to suppress power system harmonics effectively. Here, the active filter operates as a variable conductance for each individual harmonic frequency. Each harmonic conductance is dynamically adjusted according to the corresponding harmonic voltage distortion of the active filter at the installation point in response to increase or decrease of nonlinear loads or variation of resonant frequency in the power system.

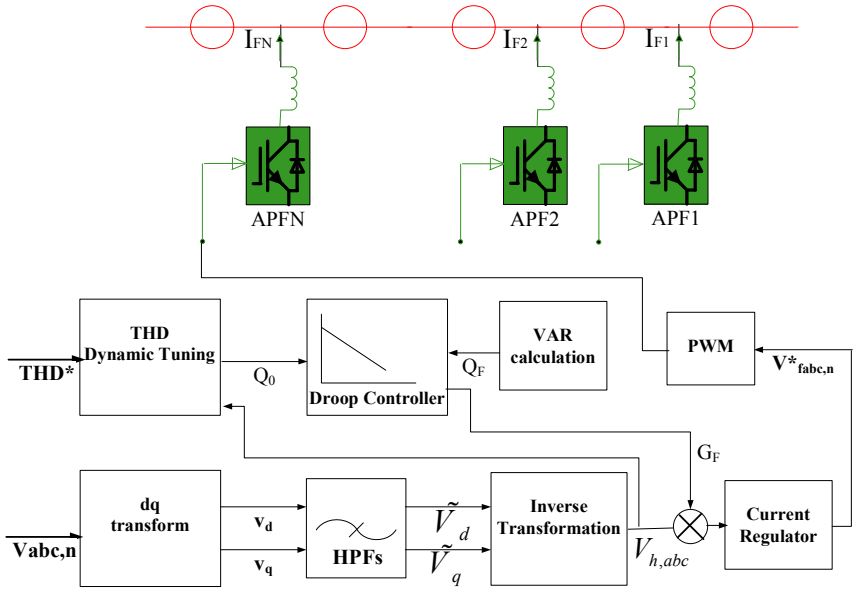

Fig. 10 – A Dynamic tuning of THD for DAFS.

III. Conclusion

In the case of APFs in parallel operation, active harmonic load sharing techniques become more complicated due to the placement of harmonic current sensors or compensation topology. A comparative summary table has been given and it is found that a combination of feed-forward and feedback topology gives better results. For multiple APF, these controllers design will be more difficult. Therefore, research efforts have concentrated more on the droop control method. Implementing the basic ideas of droop control for parallel inverter operation, placement and control of APF has been advanced to Distributed Active Filter Systems which is very much suitable for distributed generation integration on a network or off-grid operation.

References

[1] S J Chiang and J M Chang, Design and implementation of the parallelable active power filter, IEEE PES Conference 1 (1999), pp 406 – 411
[2] S.J .Chiang and J. M. Chang, Parallel operation of shunt active power filters with capacity limitation control, IEEE Trans. Aerospace and Electronic Systems 37(4) (2001), pp.1312-1320
[3] Y. Abdelli, M. Machoum, and M.S. Khoor, Control of a multimodule parallelable three-phase active power filters, Int Conf on Harmonics and Quality of Power (2004), pp.543-548.
[4] M Basu, S P Das and G K Dubey, Parallel converter scheme for high-power active power filters, IEE Proc. Electr. Power Appl. 151(4) (2004), pp. 460 – 466
[5] E C dos Santos, C B Jacobina and A M Maciel, Parallel connection of two shunt active power filters with losses optimization, APEC 1 (2010), pp. 1191 – 1196
[6] T Surgevil, K Vardar and E Akpnar, Analysis of Shunt Active Power Filters Using PSCAD for Parallel Operation, (2009), pp. 263 – 267
[7] Xueliang Wei, Ke Dai, Xin Fang, Pan Geng, Fang Luo, Yong Kang, Parallel Control of Three-Phase Three-Wire Shunt Active Power Filters, IPEMC 2 (2006), pp. 1 -5
[8] H Akagi and K Nabae, Control strategy of active power filters using multiple voltage source PWM converters, IEEE Trans. Ind. Appl. l(3) (1985), pp. 460–466
[9] L Asiminoaei, E Aeloiza, J Kim, P H Enjeti, F Blaabjerg, L Moran, S Sul, Parallel Interleaved Inverters for Reactive Power and Harmonic Compensation, PESC, (2006), pp.1-7
[10] R Pregitzer, J Pinto, G Sepulveda, M Joao A Fonso and L Joao, Parallel Association of Shunt Active Power Filters, ISIE (2007) pp. 2493 - 2498
[11] P. Mattavelli, A closed-loop selective harmonic compensation for active filters, IEEE Trans. Ind. Appl. 37(1) (2001), pp. 81–89

[12] L Asiminoaei, C. Lascu, Performance Improvement of Shunt Active Power Filter With Dual Parallel Topology, IEEE Trans Power Electronics 22(1) (2007), pp. 247-259.
[13] Falahi, G.; Mokhtari, H., Performance Improvement of Parallel Active Power Filters Using Droop Control Method, APPEEC (2009), pp 1- 4
[14] H. Akagi, H. Fujita and K. Wada, A shunt active filter based on voltage detection for harmonic termination of a radial power distribution line, IEEE Trans. Ind. Appl. 35(3) (1999), pp. 638–645
[15] K Wada, H Fujita and H Akagi, Considerations of a shunt active filter based on voltage detection for installation on a long distribution feeder, IEEE Trans. Ind. Appl. 38(4) (2002), pp. 1123–1130
[16] P. Jintakosonwit, H. Akagi, H. Fujita, and S. Ogasawara, Implementation and performance of automatic gain adjustment in a shunt active filter for harmonic damping throughout a power distribution system, IEEE Trans. Power Electron. 17(3) (2002), pp. 438–447
[17] P. Jintakosonwit, H. Fujita, H. Akagi, and S. Ogasawara, Implementation and performance of cooperative control of shunt active filters for harmonic damping throughout a power distribution system, IEEE Trans. Ind. Appl. 39(2) (2003), pp. 556–564.
[18] Po-Tai Cheng, Tzung-Lin Lee, Distributed Active Filter Systems (DAFSs): A New Approach to Power System Harmonics, IEEE Trans Ind Appl 42(5) (2006), pp. 1301 - 1309
[19] Tzung-Lin Lee, Po-Tai Cheng, H Akagi, H Fujita, A Dynamic Tuning Method for Distributed Active Filter Systems, IEEE Trans Ind Appl 44(2) (2008), pp. 612 – 623
[20] Y J Cheng and E K K Sng, A novel communication strategy for decentralized control of paralleled multi-inverter systems, IEEE Trans. Power Electron. 21(1) (2006), pp. 148–156
[21] U Borup, F Blaabjerg, P N. Enjeti, Sharing of Nonlinear Load in Parallel-Connected Three-Phase Converters, IEEE trans Ind Appl, 37(6) (2001), pp. 1817 - 1823