Dublin Institute of Technology
ARROW@DIT

Articles

School of Mathematics

2004-01-01

On the empirical balanced truncation for nonlinear systems

Marissa Condon
Dublin City University, marissa.condon@dcu.ie

Rossen Ivanov
Dublin Institute of Technology, rivanov@dit.ie

Follow this and additional works at: http://arrow.dit.ie/scschmatart

Part of the Controls and Control Theory Commons, Control Theory Commons, Mathematics Commons, Non-linear Dynamics Commons, Ordinary Differential Equations and Applied Dynamics Commons, and the Other Electrical and Computer Engineering Commons

Recommended Citation

M. Condon and R. Ivanov, On the empirical balanced truncation for nonlinear systems, Journal of Nonlinear Science, 14, 2004, pp 405-414; DOI: 10.1007/s00332-004-0617-5

This Article is brought to you for free and open access by the School of Mathematics at ARROW@DIT. It has been accepted for inclusion in Articles by an authorized administrator of ARROW@DIT. For more information, please contact yvonne.desmond@dit.ie, arrow.admin@dit.ie.

This work is licensed under a Creative Commons Attribution-Noncommercial-Share Alike 3.0 License

arXiv:math/0606430v1 [math.OC] 18 Jun 2006

Empirical balanced truncation of nonlinear systems

Marissa Condon[1,†] and **Rossen I. Ivanov**[2,3,‡]

[1] *School of Electronic Engineering, Dublin City University, Glasnevin, Dublin 9, Ireland*
[2] *School of Mathematics, Trinity College Dublin, Dublin 2, Ireland*
[3] *Institute for Nuclear Research and Nuclear Energy, Bulgarian Academy of Sciences, 72 Tzarigradsko chaussee, 1784 Sofia, Bulgaria*

[†] *e-mail: Marissa.Condon@dcu.ie*
[‡] *e-mail: ivanovr@tcd.ie*

Abstract

Novel constructions of empirical controllability and observability gramians for nonlinear systems for subsequent use in a balanced truncation style of model reduction are proposed. The new gramians are based on a generalisation of the fundamental solution for a Linear Time-Varying system. Relationships between the given gramians for nonlinear systems and the standard gramians for both Linear Time-Invariant and Linear Time-Varying systems are established as well as relationships to prior constructions proposed for empirical gramians. Application of the new gramians is illustrated through a sample test-system.

AMS subject classification numbers: 93B05, 93B07, 93B15, 93B40

Key Words: controllability and observability gramians, model reduction, balanced truncation, Lyapunov equation

1 Introduction

The development of effective model reduction techniques is of paramount importance for all areas of engineering. These include control system design for nonlinear mechanical, chemical and electronic engineering systems, the design of Radio-Frequency (RF) integrated circuits and many others [1] – [18].

In linear system theory (e.g. see [19], [20] and the references therein), the input-output interaction of a system is characterized by the so-called *gramian* matrices or *gramians*, which can be subsequently used in a model reduction procedure, called balanced truncation [19] – [22]. For general nonlinear systems the notion of gramians and balancing has been derived from the more general concept of controllability and observability (or *energy*) functions [23] – [26]. However, the calculation of the energy functions is computationally expensive and the result

is rarely an explicit solution [9], [23] – [26]. For these reasons, it is very difficult to apply this method to large-scale problems [1]. Several recent research papers, [1] followed by [5] – [8], have presented a specific framework for the analysis and model reduction of nonlinear models for the purpose of control termed *empirical balanced realization*. In the present paper, some shortcomings of this approach as regards the determination of the empirical gramians are detailed in Sections 3 and 4 and an improved approach for the computation of the empirical gramians is suggested in Section 5, *Definitions 3,4*. Numerical tests are given in Section 6.

2 Empirical gramians and balanced truncation

As in Lall et al. [1], the non-linear system under consideration is of the form:

$$\begin{aligned} \dot{x}(t) &= f((x(t), u(t)) \\ y(t) &= h(x(t)) \end{aligned} \tag{1}$$

where $f : \mathbb{R}^n \times \mathbb{R}^p \to \mathbb{R}^n$ and $h : \mathbb{R}^n \to \mathbb{R}^q$ are nonlinear functions, the function $u(t) \in \mathbb{R}^p$ is regarded as an input signal to the system and the function $y(t) \in \mathbb{R}^q$ is an output signal. A simple idea, used extensively in the analysis of autonomous nonlinear systems, is to compute a trajectory $x(t)$ on the time interval $[t_i, t_f]$ and to consider the integral [17] $\int_{t_i}^{t_f} x(\tau)x(\tau)^T d\tau$ as an approximation of the exact gramians for subsequent construction of an appropriate projector (the superscript T denotes transposition). The method proposed in [1] for general nonautonomous systems stems from this basic idea. Data, taken either from experiments or from numerical simulation and consisting of sampled measurements of $x(t)$ and $y(t)$, is used to parametrize the trajectories for the nonlinear system.

The following constructions for empirical controllability and observability gramians are then proposed in [1]:

Let $\mathbf{M} \equiv \{c_1, c_2, \ldots, c_s\}$ be a set of s positive constants, $\mathbf{T}^n \equiv \{T_1, T_2, \ldots, T_r\}$ – be a set of r orthogonal $n \times n$ matrices and $\mathbf{E}^n \equiv \{e_1, e_2, \ldots, e_n\}$ be the set of standard unit vectors in $\mathbb{R}^n$.

Definition 1. Let $\mathbf{T}^p$, $\mathbf{E}^p$ and $\mathbf{M}$ be given sets as described above. For the system (1) the empirical controllability gramian is defined as:

$$\hat{P} = \sum_{l=1}^{r} \sum_{m=1}^{s} \sum_{i=1}^{p} \frac{1}{rsc_m^2} \int_0^\infty \Phi^{ilm}(t)dt \tag{2}$$

where $\Phi^{ilm}(t) \in \mathbb{R}^{n\times n}$ is given by $\Phi^{ilm}(t) = (x^{ilm}(t) - \bar{x}^{ilm})(x^{ilm}(t) - \bar{x}^{ilm})^T$ and $x^{ilm}(t)$ is the state of system (1) corresponding to the impulsive input $u(t) = c_m T_l e_i \delta(t)$. Here $\delta(t)$ denotes Dirac's delta function. The mean $\bar{w}$ of a function $w \in L_1$ is given as:

$$\bar{w} = \lim_{t\to\infty} \frac{1}{t} \int_0^t w(\tau)d\tau. \tag{3}$$

Definition 2. Let $\mathbf{T}^n$, $\mathbf{E}^n$ and $\mathbf{M}$ be given sets as described above. For the system (1) the empirical observability gramian is defined as:

$$\hat{Q} = \sum_{l=1}^{r} \sum_{m=1}^{s} \frac{1}{rsc_m^2} \int_0^\infty T_l \Psi^{lm}(t) T_l^T dt \tag{4}$$

where $\Psi^{lm}(t) \in \mathbb{R}^{n\times n}$ is given by $\Psi_{ij}^{lm}(t) = (y^{ilm}(t) - \bar{y}^{ilm})^T (y^{jlm}(t) - \bar{y}^{jlm})$ and $y^{ilm}(t)$ is the output of system (1) corresponding to the initial condition $x^{ilm}(0) = c_m T_l e_i$ with input $u = 0$.

The purpose of using the sets $\mathbf{M}$, $\mathbf{T}^n$ and $\mathbf{E}^n$ in *Definitions 1* and *2* is an attempt to ensure that the entire region of feasible values of initial inputs/states is covered and probed. The set $\mathbf{E}^n$ defines the standard directions and the set $\mathbf{T}^n$ defines 'rotations' of these directions. The set $\mathbf{M}$ introduces different scales for each direction of the initial states/inputs.

In what follows several shortcomings associated with *Definitions 1* and *2* are brought to light and novel proposals for improvement are suggested.

3 Linear time-varying systems

An examination of Linear Time-Varying Systems (LTVS) in the context of model reduction is both nontrivial and instructive. The controllability gramian proposed in *Definition 1* for a non-autonomous system $\dot{x} = f(x,t)$ does not yield the standard controllability gramian for such systems [2], [17]. Furthermore, the derivation of the standard gramian for LTVS provides a motivation for the new improved constructions suitable for nonlinear systems. In what follows, for simplicity, only one-dimensional inputs and outputs are considered, i.e. $p = q = 1$ in (1), (2). Consider a LTVS:

$$\begin{aligned} \dot{x}(t) &= A(t)x(t) + B(t)u(t) \\ y(t) &= C(t)x(t) \end{aligned} \tag{5}$$

The fundamental solution of (5) is defined as the solution of:

$$\dot{\Theta}(t) = A(t)\Theta(t), \qquad \Theta(0) = I \tag{6}$$

where I is the corresponding identity matrix. For example, if A is a constant matrix, (as for the linear time invariant system – LTIS) then one simply recovers the very well known solution $\Theta(t) = \exp(At)$. The general solution of (5) is:

$$x(t) = \Theta(t) \left(\Theta^{-1}(t_0)x(t_0) + \int_{t_0}^{t} \Theta^{-1}(\tau)B(\tau)u(\tau)d\tau \right) \tag{7}$$

Now let $t_0 \to -\infty$, $t = 0$ and $x(-\infty) = 0$. From (7) it follows:

$$x(0) = \int_{-\infty}^{0} \Theta^{-1}(\tau)B(\tau)u(\tau)d\tau = \int_0^\infty \Theta^{-1}(-\tau)B(-\tau)u(-\tau)d\tau \tag{8}$$

and as usual, one can define a Controllability operator:

$$\mathbf{C} : L_2([0,\infty)) \to \mathbb{R}^n \qquad \text{as} \qquad \int_0^\infty d\tau \Theta^{-1}(-\tau)B(-\tau)\bullet \tag{9}$$

and Controllability gramian as:

$$P = \int_0^\infty \Theta^{-1}(-\tau)B(-\tau)B^T(-\tau)\Theta^{-1T}(-\tau)d\tau \tag{10}$$

From (7) with $t_0 = 0$ and $u \equiv 0$ it follows $y(t) = C(t)\Theta(t)x(0)$ and therefore the Observability operator can be defined as:

$$\mathbf{O} : \mathbb{R}^n \to L_2([0,\infty)) \qquad \text{as} \qquad \mathbf{O} = C(t)\Theta(t) \tag{11}$$

and the Observability gramian is:

$$Q = \int_0^\infty \Theta^T(\tau)C^T(\tau)C(\tau)\Theta(\tau)d\tau \tag{12}$$

Strictly speaking, the gramians for LTVS must depend on t as shown in [2], [17]. However, for the purposes of model reduction, constant gramians are preferred and the constant versions (10) and (12) are used as approximations. The expressions in (10) and (12) are generalisations of the gramians for LTIS where $\Theta(t) = \exp(At)$ [1].

4 Bilinear representation of nonlinear systems

Another very interesting class of nonlinear systems that it is instructive to examine are the bilinear systems; moreover a wide class of nonlinear systems (subject to suitable restrictions– [2], [10], [18]), may be represented in a bilinear form. The bilinear system is also interesting because there is an exact solution when the input is a delta-function and thus the gramians (2) and (4) can be tested explicitly. Consider the following bilinear system:

$$\begin{aligned} \dot{\hat{x}}(t) &= \hat{A}(t)\hat{x}(t) + \hat{N}\hat{x}(t)u(t) + \hat{B}u(t) \\ y(t) &= \hat{C}\hat{x}(t) \end{aligned} \tag{13}$$

Again, it is assumed that all the eigenvalues of $\hat{A}$ have negative real parts. Let the sets employed in *Definition 1* be as follows: $\mathbf{M} \equiv \{c_1, c_2, \ldots, c_s\}$, $\mathbf{T} \equiv \{1\}$ and $\mathbf{E} \equiv \{1\}$ since $p = q = 1$. Thus the inputs to the system are of the form $u_0(t) = c_m\delta(t)$. The solution to (13) with an input $u_0(t) = c_m\delta(t)$ is:

$$\hat{x}^{11m}(t) = e^{\hat{A}t}\left(I + \frac{c_m}{2}\hat{N} + \frac{c_m^2}{4}\hat{N}^2 + \ldots\right)\hat{B}c_m\theta(t) \tag{14}$$

where $\theta(t)$ is the unit step function. Note that the sum in (14) is finite since $\hat{N}$ is nilpotent by construction [2], [10]. ($\hat{x}^{11m}(t)$ corresponds to $\hat{x}^{ilm}(t)$ with $i = 1$, $l = 1$). Following from *Definition 1*, the Controllability gramian is therefore:

$$P_{BL} = \int_0^\infty e^{\hat{A}\tau}\bar{B}_N\bar{B}_N^T e^{\hat{A}^T\tau}d\tau \tag{15}$$

where

$$\bar{B}_N\bar{B}_N^T = \sum_{m=1}^{s}\left(I + \frac{c_m}{2}\hat{N} + \frac{c_m^2}{4}\hat{N}^2 + \dots\right)\hat{B}\hat{B}^T\left(I + \frac{c_m}{2}\hat{N} + \frac{c_m^2}{4}\hat{N}^2 + \dots\right)^T. \tag{16}$$

Since the bilinear system (13) assumes a linear form when the input is zero, the Observability gramian is as usual:

$$Q_{BL} = \int_0^\infty e^{\hat{A}^T\tau}\hat{C}^T\hat{C}e^{\hat{A}\tau}d\tau \tag{17}$$

It is not difficult to prove that the gramians in (15) and (17) are solutions to the following Lyapunov Equations:

$$\begin{aligned} \hat{A}P_{BL} + P_{BL}\hat{A}^T + \bar{B}_N\bar{B}_N^T &= 0 \\ \hat{A}^TQ_{BL} + Q_{BL}\hat{A} + \hat{C}^T\hat{C} &= 0 \end{aligned} \tag{18}$$

However, there are the following problems with the gramians in (15) and (17). Firstly, they do not relate to the known gramians for the bilinear systems [14] – [16], [18]. Secondly, (14) suggests that the Krylov space for the Controllability operator is span$\{\hat{A}^{p_1}\hat{N}^{p_2}\hat{B}\}$ for $p_i \geq 0$. However, the known Krylov space [10] is span$\{\hat{B}; \hat{A}^{p_1}\hat{B}; \hat{A}^{p_1}\hat{N}\hat{A}^{p_2}\hat{B}; \dots; \hat{A}^{p_1}\hat{N}\hat{A}^{p_2}\hat{N}\dots\hat{A}^{p_k}\hat{B}\}$ for $p_i > 0$.

5 Nonlinear systems

The nonlinear system in (1) has a rather general form. In [5], [7] it is suggested that the use of the empirical gramians (2) and (4) is limited only to control-affine systems. Indeed, for example, for a system, depending quadratically on the input, the square of the Delta-function cannot be defined.

For the present analysis, let the nonlinear systems be of the form:

$$\begin{aligned} \dot{x}(t) &= f(t, x(t)) + B(t)u(t) \\ y(t) &= h(t, x(t)) \end{aligned} \tag{19}$$

It contains two terms: a *dynamical* term (or drift term) $f(t, x(t))$ and a *source* term (or diffusion term) $B(t)u(t)$. Clearly, LTVS systems are of the form in (19).

Instead of considering different inputs and 'mean values' as in *Definitions 1* and *2*, it is more natural to analyse the system in a vicinity of an equilibrium point when $u(t) = 0$. Consider the vicinity of an isolated asymptotically stable equilibrium point (steady–state solution) which is supposed to be a constant solution and is chosen for simplicity at $x = 0$, i.e. $f(t, 0) \equiv 0$. It is also assumed that the system does not leave the region of attraction of this equilibrium point when the input is applied for the initial data used. If the system exhibits multiple steady–state solutions, then the analysis may be applied separately in the vicinity of each solution provided that extra care is taken to ensure that the system does not leave the region of attraction of the corresponding (asymptotically stable) equilibrium

point. Of course, the constructed gramians will therefore only provide a basis for reduction locally in the vicinity of the selected equilibrium point.

In this work, it is proposed to make use of an approximation for the most natural object – the fundamental solution Θ of (19) that would generalize the $\exp(At)$ term for linear systems. This is reasonable since the projection Krylov spaces for linear systems are generated by their fundamental solution $\exp(At)$. The constructions would, in general, depend on Θ for negative times which is unavoidable. For linear systems, of course, there is a simplification since $\left(e^{A(-t)}\right)^{-1} \equiv e^{At}$ so this does not present a limitation but in general, $\Theta^{-1}(-t) \neq \Theta(t)$, cf. (10).

Let $x^{ilm}(t)$ be the solution of (19) with $u \equiv 0$:

$$\dot{x}(t) = f(t, x(t)) \tag{20}$$

and with initial condition:

$$x^{ilm}(0) = c_m T_l e_i \tag{21}$$

It is assumed that the initial condition (21) does not take the system outside the region of attraction of the equilibrium point $x = 0$. Then the 'state-space average' of the 'nonlinear' fundamental solution may be defined as:

$$\langle \Theta(t) \rangle = \frac{1}{rs} \sum_{m=1}^{s} \sum_{l=1}^{r} \sum_{i=1}^{n} \frac{1}{c_m} x^{ilm}(t) e_i^T T_l^T \tag{22}$$

where the sets $\mathbf{M}$, $\mathbf{T}^n$, $\mathbf{E}^n$ previously defined for *Definitions 1* and *2* are employed. Indeed, for a LTVS, $x^{ilm}(t) = \Theta(t) c_m T_l e_i$ and therefore $\langle \Theta(t) \rangle \equiv \Theta(t)$.

The following constructions of empirical controllability and observability gramians for the nonlinear system (19) are now suggested:

Definition 3. For the system in (19), the *nonlinear* controllability gramian is defined as:

$$\tilde{P} = \int_0^\infty \langle \Theta(-\tau) \rangle^{-1} B(-\tau) B^T(-\tau) \langle \Theta(-\tau) \rangle^{-1T} d\tau \tag{23}$$

where $\langle \Theta(t) \rangle$ is as described in (22).

Of course, this construction requires that $\langle \Theta(-\tau) \rangle$ is invertible for all $\tau \geq 0$. (23) is obviously a generalisation of (10).

Definition 4. For the system in (19) the *nonlinear* observability gramian is defined as:

$$\tilde{Q} = \int_0^\infty z^T(\tau) z(\tau) d\tau \tag{24}$$

where $z(\tau) \in \mathbb{R}^n$ is given by:

$$z(t) = \frac{1}{rs} \sum_{i,l,m} \frac{1}{c_m} y^{ilm}(t) e_i^T T_l^T$$

and $y^{ilm}(t)$ is the output which corresponds to an initial state $x^{ilm}(0) = c_m T_l e_i$ and a zero source term. The motivation for this construction is as follows:

For a linear output $y(t) = C(t)x(t)$, since $\langle\Theta(t)\rangle \equiv \Theta(t)$ the observability gramian (12) is:

$$Q = \int_0^\infty \langle\Theta(\tau)\rangle^T C^T(\tau)C(\tau)\langle\Theta(\tau)\rangle d\tau \tag{25}$$

Since

$$C(\tau)\langle\Theta(\tau)\rangle = \frac{1}{rs}\sum_{i,l,m}\frac{1}{c_m}C(t)x^{ilm}(t)e_i^T T_l^T = \frac{1}{rs}\sum_{i,l,m}\frac{1}{c_m}y^{ilm}(t)e_i^T T_l^T = z(t)$$

then the construction in (24) is confirmed as a generalisation of (12).

Both gramians (23) and (24) when applied to LTVS (or LTIS) thus result in the usual gramians i.e. (10) and (12). This confirms the motivation for their use in preference to (2) and (4).

6 Illustrative numerical example

The circuit employed is the nonlinear RC ladder shown in Fig. 1 (frequently employed as a test circuit for model reduction techniques [10] – [13], [18]). The example enables comparisons to be made between the existing formulations for empirical gramians and those proposed in this contribution. The nonlinear resistors (a diode in parallel with a unit resistor) have the constitutive relation $i(v) = (e^{40v} - 1) + v$ (where i represents current and v represents voltage). The capacitors have unit capacitance. The input is a current source $u(t) = e^{-t}$ entering node 1 and the output is the voltage taken at node 1, Fig 2(a). This is an example of a gradient system (e.g. according to the definition in [27]), since the equations describing the system may be written in the form:

$$\begin{aligned} \dot{v} &= -\nabla V + Bu(t) \\ y &= Cv \equiv v_1(t) \end{aligned} \tag{26}$$

where $B = [1 \quad 0 \quad \dots \quad 0]^T$, $C = B^T$ and

$$V(v) = \frac{1}{40}e^{40v_1} - v_1 + \frac{v_1^2}{2} + \sum_{k=1}^{n-1}\left(\frac{1}{40}e^{40(v_k - v_{k+1})} - (v_k - v_{k+1}) + \frac{(v_k - v_{k+1})^2}{2}\right). \tag{27}$$

The function $V(v)$ represents a strong Lyapunov function for the gradient system as described in [27]. This then enables the application of Lyapunov stability criterion to show that $v = 0$ is an asymptotically stable equilibrium point of the system (when the source is set to zero).

The number of nodes in the system is $n = 30$. The time interval chosen for consideration is $t \in [0, 1]$. The reduction of the original system to a system of order 3 is implemented using several different methods.

In order to compare the new gramians with the existing constructions for empirical gramians (*Definitions 1,2*), a bilinear representation [2], [10], [18] of the system in (26) – (27) is employed. The reason for doing this is that an exact

solution exists for a bilinear system when subjected to impulsive inputs. This is of importance in the formation of the gramian as specified in *Definition 1* as it necessitates subjecting the system to impulsive inputs. A bilinear approximation with two terms in the Taylor's series expansion is employed. The resultant bilinear model is of order $30 + 30^2 = 930$. For information, the Root Mean Square (RMS) error between the result from the nonlinear model (26) and the full order– 930 bilinear approximation (13) is 1.0×10^{-2}, Fig 2(b).

As a benchmark, consider the simplest reduced model (of order 3)– that which employs only the linear part of the bilinear approximation to form the gramians necessary for balancing. To be specific, the gramians employed are the solutions of the following Lyapunov equations:

$$\hat{A}P_{BL} + P_{BL}\hat{A}^T + \hat{B}\hat{B}^T = 0, \qquad \hat{A}^T Q_{BL} + Q_{BL}\hat{A} + \hat{C}^T\hat{C} = 0. \tag{28}$$

The RMS error in comparison to the full order– 930 bilinear model is 2.6×10^{-2}, Fig 2(c).

Now consider the use of the gramians (18) formed on the basis of *Definitions 1* and *2* with $\dim(\hat{x}) = 930$, $\mathbf{M} \equiv \{-5, -0.5, -1, -0.1, 0.1, 0.5, 1, 5\}$, $\mathbf{T}^{930} = \{I\}$. The RMS error in comparison to the full order– 930 bilinear model is 7.5×10^{-2}, Fig 2(d). Moreover, it is observed that when $\mathbf{M} \equiv \{c_1\}$, i.e. consisting of only one constant, the reduction process is ill-defined for some values of c_1, e.g. $c_1 = 0.20$; 0.22; i.e. the reduced model is unstable.

Finally, consider the case where the gramians formed on the basis of *Definitions 3* and *4* are employed for reduction purposes. The integration over τ in these constructions is replaced by a discrete summation. The resulting RMS error (in comparison to the original model) is 5.3×10^{-5}, Fig 2(e). This indicates the superiority of the novel constructions for the purposes of model reduction via a balancing technique.

7 Conclusions

The paper has proposed new constructions for empirical gramians for subsequent use in a method of model reduction based on 'balancing'. The important new concept involved in the formation of the novel empirical gramians, (23) and (24), is that of a 'state-space average' of the 'nonlinear' fundamental solution (22).

The method is successful if the state-space average of the nonlinear fundamental solution is well defined. Of course, this is not the case for all nonlinear systems as the solution of (20) may not exist or may only exist for specific choices of the initial data. However, the method is applicable for systems for which the nonlinearities are not too severe, e.g. for the so-called 'weakly' nonlinear systems as described in [10]. For such systems, it is expected that the 'nonlinear' fundamental solution is 'close' to the exponential form that corresponds to the fundamental solution for a linear system. The new empirical gramians coincide with the usual gramians for both LTVS and LTIS.

References

[1] Lall S, Marsden JE, Glavaski S. A subspace approach to balanced truncation for model reduction of nonlinear control systems. *International Journal of Robust and Nonlinear Control* 2002; Vol. 12, pp. 519-535.

[2] Mohler R. *Nonlinear Systems Vol.1: Dynamics and Control*, Prentice Hall: New Jersey, 1991.

[3] Bloch A. *Nonholonomic Mechanics and Control*, SERIES: Interdisciplinary Applied Mathematics, Springer-Verlag: NY, 2003.

[4] Shvartsman SY, Theodoropoulos C, Rico-Martinez R, Kevrekidis IG, Titi ES and Mountziaris TJ. Order reduction for nonlinear dynamic models of distributed reacting systems. *Journal of Process Control*, 2000. Vol. 10(2-3), pp. 177-184.

[5] Hahn J, Edgar TF, Marquardt W. Controllability and Observability Covariance Matrices for the Analysis and Order Reduction of Stable Nonlinear Systems. *Journal of Process Control* 2003; Vol. 13 (2), pp. 115-127.

[6] Hahn J, Edgar TF. An Improved Method for Nonlinear Model Reduction Using Balancing of Empirical Gramians. *Computers and Chemical Engineering* 2002; Vol. 26(10), pp. 1379-1397.

[7] Hahn J, Edgar TF. Balancing Approach to Minimal Realization and Model Reduction of Stable Nonlinear Systems. *Industrial and Engineering Chemistry Research* 2002, Vol. 41(9), pp. 2204-2212.

[8] Hahn J, Edgar TF. A Gramian Based Approach to Nonlinearity Quantification and Model Classification. *Industrial and Engineering Chemistry Research* 2001, Vol. 40(24), pp. 5724-5731.

[9] Newman AJ, Krishnaprasad PS. Nonlinear model reduction for RTCVD, *Proceedings of the 32nd Conference on Information Sciences and Systems*, Princeton, NJ, March 18-20, 1998. (Also Technical Report, T.R. 98-42, Institute for Systems Research, August 1998.)

[10] Phillips JR. Projection-based approaches for model reduction of weakly nonlinear, time-varying systems, *IEEE Transactions on computer-aided design of integrated circuits and systems* 2003, Vol. 22, No. 2.

[11] Chen Y, White J. A quadratic method for nonlinear model order reduction. *International conference on modelling and simulation of Microsystems semiconductors, sensors and actuators*, San Diego, 2000.

[12] Rewienski M and White J. A trajectory piecewise-linear approach to model order reduction and fast simulation of nonlinear circuits and micromachined devices, *IEEE Transactions on Computer-aided Design of Integrated Circuits and Systems* 2003, Vol. 22, No. 2, pp. 155-170.

[13] Dong N and Roychowdhury J. Piecewise Polynomial Nonlinear Model Reduction, *DAC 2003*, Anaheim, California, USA, 2003.

[14] Al-Baiyat SA, Bettayeb M and Al-Saggaf UM. New model reduction scheme for bilinear systems, *Int. J. of System Science* 1994, Vol. 25, pp.1631-1642.

[15] Xie B, Syrmos V. The s-reciprocal system for model reduction of k-power bilinear systems, *Proc. 35th Conf. on Decision and Control* 1996, Kobe, Japan, pp. 4294-4299.

[16] D'Alessandro P, Isidori A and Ruberti A. Realization and structure theory of bilinear dynamical systems, *SIAM J. Control* 1974, Vol. 12, pp. 517-535.

[17] Van Dooren P. Gramian based model reduction of large-scale dynamical systems. In: *Numerical Analysis 1999*, 2000, pp. 231-247.

[18] Condon M. and Ivanov, R. Nonlinear systems-algebraic gramians and model reduction. *COMPEL Journal* 2005, Vol. 24, No. 1 pp. 202-219.

[19] Antoulas AC, Sorensen DC, Gugercin S. A survey of model reduction methods for large-scale systems. *Contemporary Mathematics, AMS Publications*, 2001, Vol. 280, pp. 193-219.

[20] Antoulas AC. *Approximation of large-scale dynamical systems*, SIAM Press-Philadelphia, 2003.

[21] Moore B. Principal Component analysis in linear systems: Controllability, Observability and model reduction. *IEEE Trans. on Automatic Control* 1981; AC-26(1).

[22] Zhou K, Doyle JC, Glover K. *Robust and Optimal Control*, Prentice Hall, 1996.

[23] Scherpen JMA. Balancing of nonlinear systems. *Systems and Control Letters* 1993; Vol. 21, pp.143-153.

[24] Scherpen JMA. Balancing of nonlinear systems. *Dissertation, Systems and Control Group*, University of Twente, Enschede, the Netherlands, 1994.

[25] Fujimoto K, Scherpen JMA. Model reduction for nonlinear systems based on the differential eigenstructure of Hankel operators. *Proceedings of the 40th IEEE Conference on Decision and Control (CDC2001)*, Orlando, USA 2001, pp. 3252-3257.

[26] Gray WS, Scherpen JMA. Hankel Operators and Gramians for Nonlinear Systems. *Proceedings of the 37th IEEE Conference on Decision and Control (CDC'98)*, Tampa, Fl, USA 1998, pp. 1416-1421.

[27] McLachlan RI, Quispel GRW and Robidoux N. Unified approach to Hamiltonian systems, Poisson Systems, gradient systems and systems with Lyapunov functions or First Integrals. *Physical Review Letters* 1998, Vol. 81 (12), pp. 2399-2403.

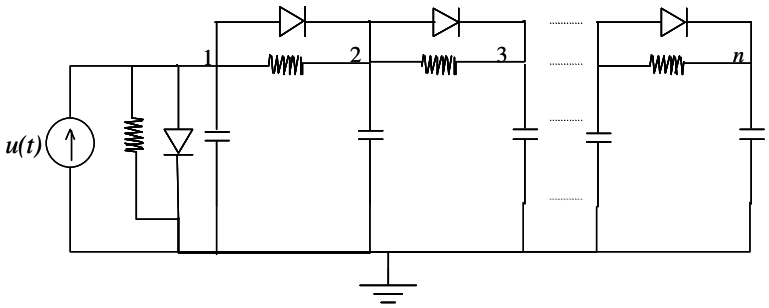

Figure 1: Nonlinear circuit

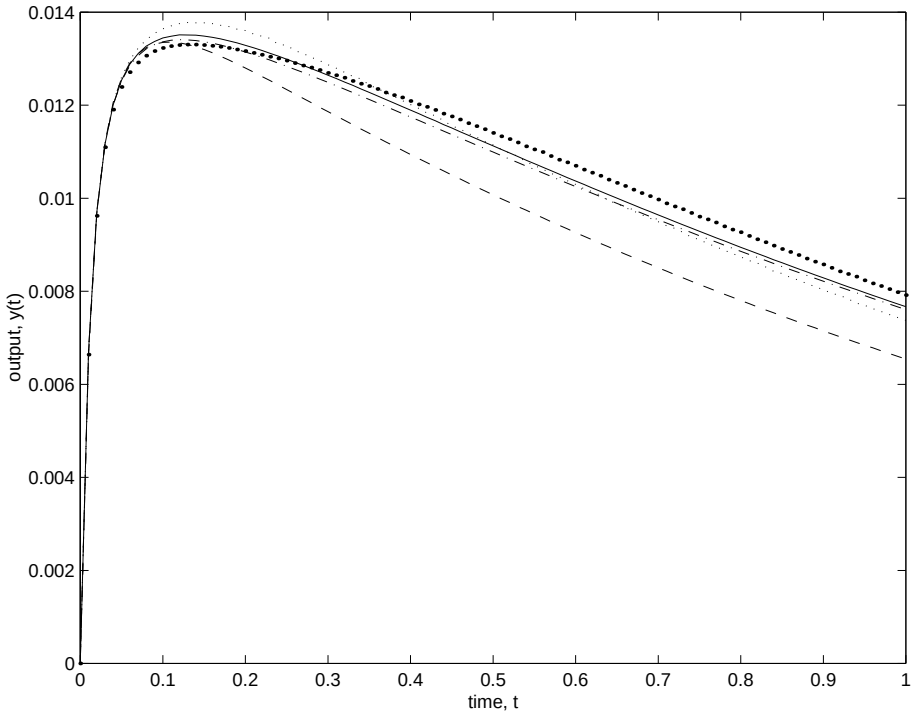

Figure 2: Comparison between output from nonlinear model and reduced-order models: (a) Solid line – Nonlinear model (26); (b) Dash-dotted line – Bilinear approximation (13); (c) Points – Reduced bilinear system with gramians based only on linear part of bilinear approximation (28); (d) Dashed line – Reduced-model with gramians (18) based on *Definitions 1,2*. (e) Dotted line – reduced-order model where the reduction is based on the novel Empirical gramians – (23) and (24).