Dublin Institute of Technology
ARROW@DIT

Technical Schools:Examination Papers

City of Dublin Technical Schools

1933-01-01

Geometrical Drawing: Technical School Examinations 1933

Department of Education: Technical Instruction Branch

Follow this and additional works at: http://arrow.dit.ie/techexam

Part of the Education Commons

Recommended Citation

Department of Education: Technical Instruction Branch, "Geometrical Drawing: Technical School Examinations 1933" (1933). *Technical Schools:Examination Papers.* Paper 67.
http://arrow.dit.ie/techexam/67

This Other is brought to you for free and open access by the City of Dublin Technical Schools at ARROW@DIT. It has been accepted for inclusion in Technical Schools:Examination Papers by an authorized administrator of ARROW@DIT. For more information, please contact yvonne.desmond@dit.ie, arrow.admin@dit.ie.

AN ROINN OIDEACHAIS.
(Department of Education.)

BRAINSE AN CHEÁRD-OIDEACHAIS.
(Technical Instruction Branch.)

SPECIAL EXAMINATIONS FOR TEACHERS' CERTIFICATES.

1933.

GEOMETRICAL DRAWING.

Thursday, May 11th—6 to 10 p.m.

Examiner—SAMUEL MACCANN, ESQ., A.R.C.A. (Lond.).

Co-Examiner—P. O'SULLIVAN, ESQ., A.R.C.A. (Lond.).

GENERAL INSTRUCTIONS.

You are carefully to enter on the Drawing Paper and Envelope supplied your Examination Number and the subject of examination, but you are not to write your name on either. No credit will be given for any Drawing Paper upon which your name is written, or upon which your Examination Number is not written.

You must not have with you any book, notes, or scribbling-paper.

You are not allowed to write or make any marks upon your paper of questions.

You must not, under any circumstances whatever, speak to or communicate with another candidate ; and no explanation of the subject of the examination may be asked for or given.

You must remain seated until your drawing-paper has been taken up, and then leave the examination-room quietly. You will not be permitted to leave before the expiration of twenty minutes from the commencement of the examination, and will not be re-admitted after having once left the room.

If you break any of these rules, or use any unfair means, you are liable to be dismissed from the examination, and your examination may be cancelled by the Department.

Four hours are allowed for this paper. Answer-books, unless previously given up, will be collected at 10 *p.m.*

INSTRUCTIONS.

Read the General Instructions on page 1.

(*a*) All the questions may be attempted.

(*b*) Equal value is attached to each question.

(*c*) The constructions should be very accurate, and distinctly and neatly finished in pencil. *All construction-lines must be shown.*

(*d*) Careless work, or work done with soft or blunt pencils, will receive little credit.

(*e*) Lines parallel or perpendicular to others may be drawn mechanically without showing any construction.

Protractors and set-squares may be used.

(*f*) The number of each question must be clearly shown on the drawing-paper.

(*g*) Diagrams, to be drawn the same size as the originals, may be pricked through or otherwise transferred.

---

1. Draw a diagonal scale in which $2\frac{3}{4}$ inches represents 1 yard. Finish and figure the scale neatly and carefully, showing yards, feet and inches, up to two yards. Using this scale, make a drawing of a quadrilateral ABCD, the side AB 1 yd. 1 ft. 7 ins., side BC 1 yd. 1 ft. 5 ins. and sides CD and DA 2 ft. 3 ins. and 3 ft. 3 ins. respectively. The angle ABC to be 72°. Draw a second figure similar to the first its longest side to measure 1 yd. 1 ft. 1 in.

2. Construct an ellipse by any method with which you are familiar. Major axis $4\frac{1}{2}$ inches, minor axis $2\frac{1}{2}$ inches. Draw a tangent and a normal to the ellipse.

3. Draw the plan and elevation of a square pyramid, edge of base $1\frac{1}{2}$ inches, altitude 2 inches, when one edge of the base lies in the horizontal plane and one of the triangular faces is inclined at 30° to the same plane; the plan of the axis of the pyramid to make 60° with the vertical plane.

4. Make an outline drawing (single line) of the construction on which the pattern (Fig. I.) is based, assuming that the width of the portion shown is 4 inches.

5. Draw a pentagon of $1\frac{1}{2}$ inches side. Construct a triangle and a square each equal in area to the pentagon.

6. Draw the geometrical framework on which the "all-over" pattern (Fig. 2.) is designed, assuming that the portion shown is 4 inches wide. Sketch freehand on your drawing the main features of the pattern in order to show the value of your construction.

7. The diagram (Fig. 3.) represents a geometrical adaptation of the letter L from the "Book of Kells." Make a drawing according to the dimensions indicated. All points of contact must be clearly shown.

8. Fig. 4 shows the elevation of a lampshade in the form of a truncated cone. Show the surface development, and on it indicate how you would set out the main lines of a repeating border pattern, based on the unit shown on the diagram. Scale: one-third full size.

9. The diagram (Fig. 5) gives the plan and end view of a set screw, with axis inclined at 30° to the vertical plane. Draw its elevation on a vertical plane parallel to XY.

10. The plan and elevation is shown (Fig. 6.) of a square pyramid intersected by an equilateral triangular prism. Project a new elevation on X^1 Y^1 and indicate the section made by the vertical plane AB.

SPECIAL EXAMINATIONS FOR TEACHERS' CERTIFICATES, 1933.

GEOMETRICAL DRAWING.

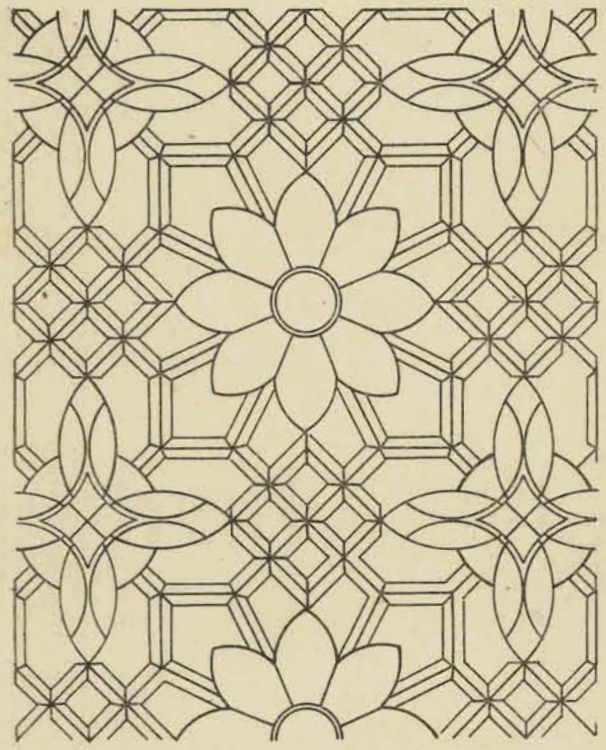

FIG. 1.

FIG. 2.

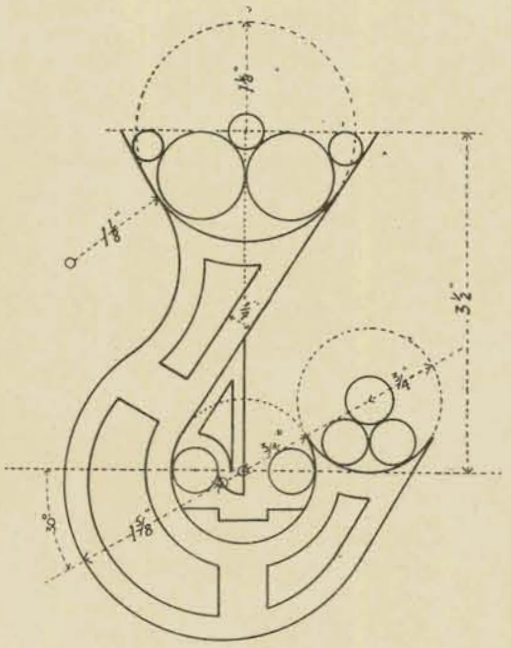

FIG. 3.

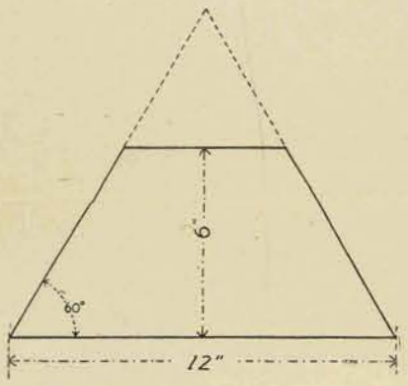

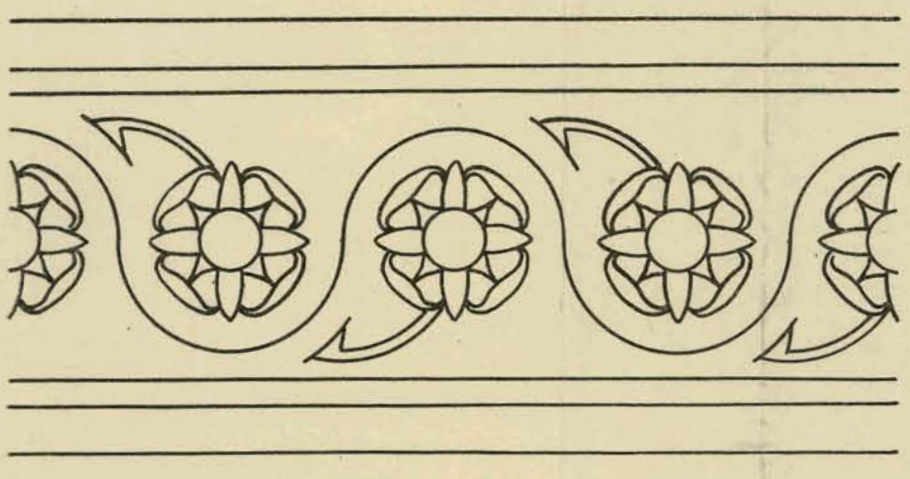

FIG. 4.

FIG. 6.

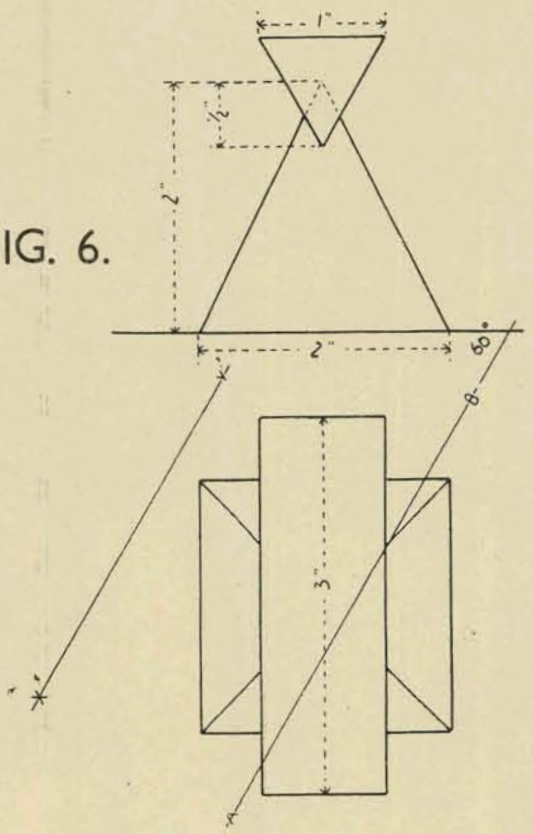

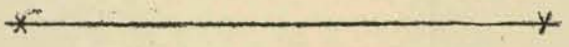
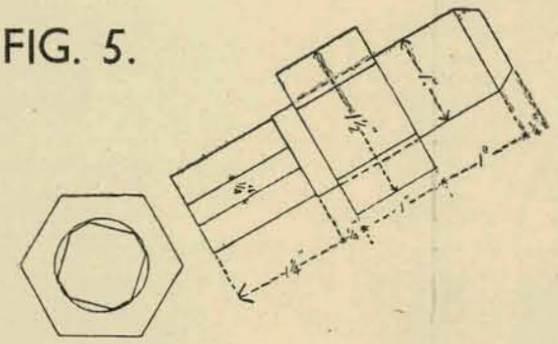
FIG. 5.