Dublin Institute of Technology
ARROW@DIT

Articles | School of Electrical and Electronic Engineering

1993-01-01

All-Optical Timing Extraction with Frequency Division Using a Twin-Section Laser Diode

Gerald Farrell
Dublin Institute of Technology, gerald.farrell@dit.ie

Paul Phelan
Trinity College Dublin

Joe Hegarty
Trinity College Dublin

J. Shields
Northern Ireland Telecommunications Engineering Centre

Follow this and additional works at: http://arrow.dit.ie/engscheceart

Part of the Electrical and Computer Engineering Commons

Recommended Citation

Farrell, G., Phelan, P.,Hegarty, J., Shields, J.: All-Optical Timing Extraction with Frequency Division Using a Twin-Section Laser Diode.Photonics Technology Letters, Vol.5, 1993, pp.718-721.

This Article is brought to you for free and open access by the School of Electrical and Electronic Engineering at ARROW@DIT. It has been accepted for inclusion in Articles by an authorized administrator of ARROW@DIT. For more information, please contact yvonne.desmond@dit.ie, arrow.admin@dit.ie.

This work is licensed under a Creative Commons Attribution-Noncommercial-Share Alike 3.0 License

It is clear from this operation principle that the proposed structure will also be effective in improving the crosstalk of optical switches using other kinds of polarization switching elements.

ACKNOWLEDGMENT

The author wishes to thank Dr. T. Miki, Dr. H. Ishio, and Dr. T. Ito for their encouragement throughout the course of this research.

REFERENCES

[1] R. E. Wagner and J. Cheng, "Electrically controlled optical switch for multimode fiber applications," *Appl. Opt.*, vol. 19, no. 17, pp. 2921–2925, Sept. 1980.

[2] R. A. Soref, "Low-cross-talk 2 × 2 optical switch," *Opt. Lett.*, vol. 6, no. 6, pp. 275–277, June 1981.

[3] Y. Fujii, "1 × 2 optical switch for WDM transmission systems," *Electron. Lett.*, vol. 24, no. 18, pp. 1153–1154, Sept. 1988.

[4] N. K. Shankar, J. A. Morris, C. P. Yakymyshyn, and C. R. Pollock, "A 2 × 2 fiber optic switch using chiral liquid crystal," *IEEE Photon. Technol. Lett.*, vol. 2, pp. 147–149, Feb. 1990.

[5] R. A. Soref and D. H. McMahon, "Total switching of unpolarized fiber light with a four-port electro-optic liquid-crystal device," *Opt. Lett.*, vol. 5, no. 4, pp. 147–149, Apr. 1980.

[6] Y. Fujii, "Low-crosstalk 1 × 2 optical switch composed of twisted nematic liquid crystal cells," *IEEE Photon. Technol. Lett.*, vol. 5, pp. 206–208, Feb. 1993.

[7] R. A. Soref and D. H. McMahon, "Calcite 2 × 2 optical bypass switch controlled by liquid-crystal cells," *Opt. Lett.*, vol. 7, no. 4, pp. 186–188, Apr. 1982.

All-Optical Timing Extraction with Frequency Division Using a Twin-Section Laser Diode

Gerald Farrell, Paul Phelan, John Hegarty, and J. A. Shields

***Abstract*—All-optical timing extraction from a coded line signal with division of the extracted clock frequency is demonstrated using a single twin-section self-pulsating laser diode. Either the bit-rate clock or a submultiple of the bit-rate clock can be extracted, depending only on the dc biases applied to the self-pulsating laser diode. Timing extraction is carried out for the first time without optical injection locking of the self-pulsating laser diode by the optical data source.**

INTRODUCTION

In order to achieve higher operating speeds in telecommunications for both transmission and switching functions, the use of optical devices rather than electronic devices has been proposed. One such function is all-optical synchronization using a self-pulsating laser diode.

Twin-section self-pulsating laser diodes have been used for all-optical timing extraction at the bit-rate-clock frequency [1] from a pseudorandom data signal. More recently all-optical synchronization with frequency division has been demonstrated using periodic input signals for both a sinusoidal input signal [2] and a mode locked input signal [3]. Frequency division by two is achieved by synchronizing the fundamental component of the source signal with the second harmonic of the self-pulsating output of the twin-section laser diode. One of the characteristics of timing extraction and synchronization experiments to date has been that optical injection locking of the self-pulsating laser diode was reported when synchronization occurred.

All-optical timing extraction from a demultiplexed channel in a four-channel 20 Gbs/s OTDM system has been demonstrated [4]. In this case the extracted clock has a frequency of 5 GHz. However, to date we believe that all-optical timing extraction of a timing signal at a submultiple of the bit-rate-clock frequency, without demultiplexing, has not been demonstrated.

In this letter we report for the first time all-optical timing extraction with frequency division by two, from a pseudorandom data signal coded using a 5B/6B line code, using a single self-pulsating laser diode. We show that it is possible by varying only the dc bias levels on the self-pulsating laser diode to select timing extraction of either the bit-rate clock or a clock at half the bit-rate frequency, which could be used to synchronize a time division demultiplexer. We also demonstrate for the first time that it is possible to achieve timing extraction without injection locking of the self-pulsating laser diode by the optical data source.

EXPERIMENTAL SETUP

Fig. 1 shows the experimental setup used. Two similar laser diodes are used, one as an optical data source and

Manuscript received February 18, 1993; revised March 24, 1993.

G. Farrell, P. Phelan, and J. Hegarty are with the Optronics Ireland Research Laboratories, Physics Department, Trinity College, Dublin 2, Ireland.

J. A. Shields is with the Northern Ireland Telecommunications Engineering Centre, Northern Telecom, Newtownabbey, Co. Antrim, Northern Ireland.

IEEE Log Number 9209608.

1041-1135/93$03.00 © 1993 IEEE

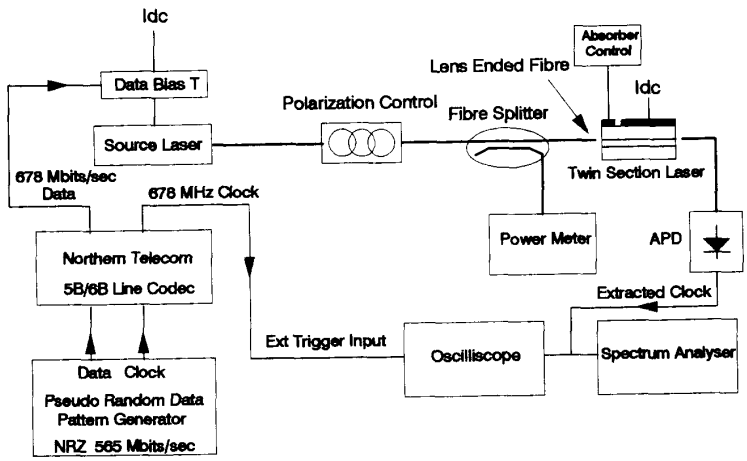

Fig. 1. Experimental setup.

the other for timing extraction. Both lasers are twin-section InGaAsP BH devices with lengths of 500 μm.

The original data source used is a pseudorandom 2^{23}-1 NRZ signal operating at a bit rate of 565 Mb/s. Since this signal does not have a significant clock component it is coded using a Northern Telecom 5B/6B line codec to produce a signal with a bit rate of 678 Mb/s, which has a clock component at 678 MHz. It should be noted that a 5B/6B line code was used in preference to a simple RZ line code because 5B/6B line codes are in use in installed optical line systems. Both RZ coding and 5B/6B coding contain a significant clock component, however 5B/6B coding is more spectrally efficient compared to RZ coding.

The electrical data signal is used to modulate the bias current on a FP laser diode, taken from the same wafer as the self-pulsating laser diode used for timing extraction. The optical spectrum of this device is multimode and is centred on 1610.3 nm. This device was chosen as a source in order to demonstrate that it is possible to extract a timing signal without optical injection locking of the self-pulsating laser diode.

The signal from the source laser is passed through an isolator and is coupled into a singlemode fiber, the output of which is coupled to the self-pulsating timing extraction laser using an 8 μm (radius) lens-ended fiber. The twin-section laser diode used for timing extraction has a 4:1 gain to absorber length ratio and is operated within it's self-pulsation regime [5]. The optical spectrum of this device is also multimode and is centred on 1620.5 nm.

The laser outputs are monitored on an avalanche photodiode with a bandwidth greater than 1.8 GHz. All of the lasers in the system setup are temperature controlled to within ± 0.1°C.

Results

The RF spectrum of 678 Mb/s data signal was measured and is shown in Fig. 2. The spectrum contains a 678 MHz clock component which has a level 40 dB above the

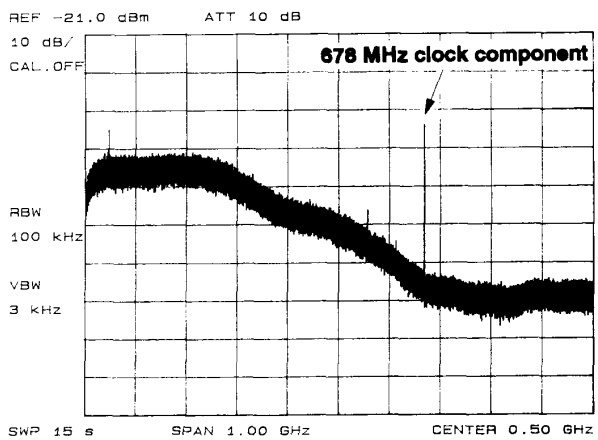

Fig. 2. RF Spectrum of the 678 Mb/s optical coded line signal.

level of the random data spectrum at this frequency. This clock component also has further three harmonics. There is no timing component at half the bit-rate frequency (339 MHz). A residual peak at 565 MHz also exists and a component at 56.6 MHz, generated by the line codec. An eye diagram for the optical data signal is shown in Fig. 3(a).

Timing extraction at 678 MHz without frequency division is possible. The self-pulsating twin section laser is operated with a gain section current of 85 mA and the absorber voltage is adjusted so that the self-pulsating frequency is just below 678 MHz, in the absence of the source optical data signal. The optical data signal from the source laser is then injected into the self-pulsating laser diode and synchronization is achieved. The optimum absorber voltage and current for synchronization is 0.198 V and -6.68 mA, respectively. The use of a number of alternative pseudorandom data patterns did not result in an observable degradation of the extracted optical clock.

The extracted optical clock at 678 MHz from the self-pulsating laser diode is shown in the oscillogram in Fig.

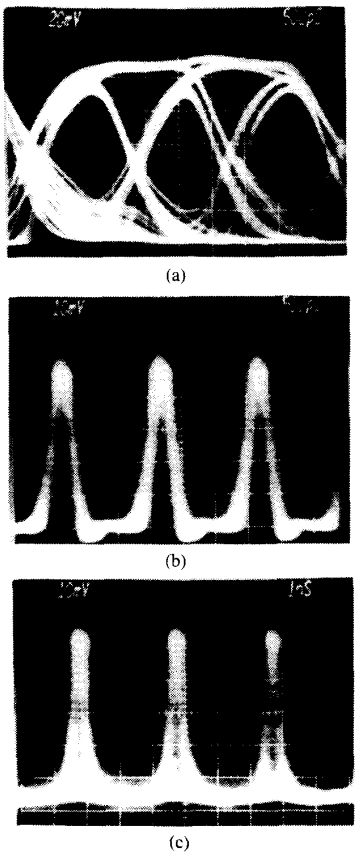

Fig. 3. Oscillograms showing timing extraction: (a) Eye diagram for optical data signal (500 ps/div). (b) Extracted clock at 678 MHz (500 ps/div). (c) Extracted clock at 339 MHz, at half the bit rate frequency (1 ns/div).

3(b). The oscilloscope used is triggered by the original electronic clock from the pattern generator, demonstrating that synchronization takes place in time. The spectrum of the self-pulsating output under synchronization shows that the self-pulsating fundamental changes to exactly 678 MHz, with an RF spectral width equal to that of the source clock component. The average optical signal power entering the self-pulsating laser diode is approximately 30 μW.

Timing extraction with frequency division was also carried out. In this case a clock is extracted at half the bit-rate-clock frequency at 339 MHz, even though there is no timing component in the RF spectrum of the source data signal at 339 MHz. The bias conditions for the source laser are identical to those in use for timing extraction at 678 MHz. In this case the gain section current of the self-pulsating twin section laser diode is set at 75 mA and the absorber voltage is adjusted so that the self-pulsating frequency is just below 339 MHz, in the absence of the source optical data signal. This means that the second harmonic of the self-pulsation is close to 678 MHz.

When the optical data signal from the source laser is applied to the self-pulsating laser diode, synchronization is achieved at 678 MHz. However, the synchronized output of the self-pulsating laser diode is now at exactly 339 MHz, as shown in the oscillogram in Fig. 3(c), with a timebase setting of 1 ns/div. The optimum absorber voltage and current for synchronization is 0.319 V and -4.68 mA respectively. This extracted clock could be used for synchronization in a two-channel optical time division demultiplexer.

The quality of the extracted clock at half the bit-rate frequency is visibly inferior to that of the clock extracted at the bit rate frequency. This is probably a result of the reduced power available for synchronization caused by the absence of overlap in frequency between the even harmonics of the self-pulsating laser diode and the harmonics of the timing component in the optical data signal. An increase in the optical signal power was not available to check if such an increase would improve the quality of synchronization, as has been recently observed for periodic signals [3]. With a greater optical signal power level an extension of the technique to extraction of a clock component at one third of the bit-rate clock or lower should be possible, allowing synchronization for higher orders of optical division multiplexing.

Timing extraction with division from a source signal that is a random optical data signal is inherently more difficult to achieve than synchronization with division from a periodic optical source signal [2], [3]. In demonstrating synchronization with division the source signal used is periodic and the RF spectrum will consist of a discrete series of harmonics, similar to the RF spectrum of the self-pulsating laser diode. However, in demonstrating timing extraction with division from a random optical data signal, the source RF spectrum is continuous, with only a fraction of the total signal power contained in the timing component. Furthermore, because of frequency division only half of the self-pulsating laser diodes harmonics overlap timing components in the source signal.

One of the advantages of this technique is that it is possible to switch from timing extraction at the bit-rate-clock frequency to timing extraction at half the bit-rate frequency by changing only the dc bias applied to the self-pulsating laser diode. In principle, therefore, it is possible to easily reconfigure the operation of such a timing extraction system, a feature which may be of significant importance in future transparent optical networks. The highest reported data rate for timing extraction with self-pulsating laser diodes is 5 Gb/s [4], demonstrating the potential of the technique for high speed optical networks.

Unlike previous experiments involving timing extraction, in this case the optical data source laser is multimode with an output centered on a wavelength that is significantly lower than that of the self-pulsating laser diode. The optical output spectrum of the self-pulsating laser diode when synchronized shows that the laser is not injection locked. This is an important result for two rea-

sons. Firstly, it demonstrates that injection locking is not a necessary condition for effective timing extraction. It also demonstrates that timing extraction can be accompanied by a change in the wavelength of the synchronized clock signal. Such a wavelength change for an optical clock could find applications in hybrid optical switching systems based on time and wavelength switching. These aspects of timing extraction will be considered in a future publication.

Conclusion

We have demonstrated that it is possible to extract a timing signal from a random data signal at either the bit rate frequency or at half the bit-rate frequency, using the same twin section self-pulsating laser diode. It is possible to switch between these two timing extraction states by altering only the dc biases applied to the self-pulsating laser diode. We have also proposed that injection locking of the self-pulsating laser diode is not a necessary condition for timing extraction.

Acknowledgment

The authors would like to thank M. J. Robertson of British Telecom Laboratories for providing the lasers used in this work and D. McCaughan of Northern Telecom for the use of the line codec.

References

[1] M. Jinno and T. Matsumoto, "Optical retiming regenerator using 1.5 μm multi-electrode DFB LDs," *Electron. Lett.*, vol. 25, no. 20, pp. 1332–1333, 1989.

[2] G. Farrell, P. Phelan, and J. Hegarty, "All-optical synchronization with frequency division using a self pulsating laser diode," *Electron. Lett.*, vol. 28, no. 8, pp. 738–739, 1992.

[3] P. Phelan, G. Farrell, and J. Hegarty, "All-optical synchronization and frequency division of mode-locked pulses," *IEEE Photon. Technol. Lett.*, vol. 4, pp. 930–932, July 1992.

[4] P. E. Barnsley, G. E. Wickens, H. J. Wickes, and D. M. Spirit, "A 4×5 Gbit/s transmission system with all-optical clock recovery," *IEEE Photon. Technol. Lett.*, vol. 4, pp. 83–86, Jan. 1992.

[5] G. Farrell, P. Phelan, and J. Hegarty, "Self pulsation operating regime for the Absorber of a twin section laser diode," *Electron. Lett.*, vol. 27, no. 16, pp. 1403–1404, 1991.

Optical Frequency Comb Generator Using Phase Modulation in Amplified Circulating Loop

Keang-Po Ho and Joseph M. Kahn

Abstract—**We propose a method to generate a comb of precisely spaced optical frequencies over a terahertz span. This scheme uses a sinusoidally driven phase modulator and an optical amplifier placed within an optical fiber loop, so that the modulation is enhanced by multiple passes through the loop. By maintaining the loop round-trip gain slightly below unity, a comb of tens to hundreds of frequencies can be generated. If the loop input is derived from a laser locked to an absolute frequency reference, then each of the output frequencies will have an absolute accuracy approaching that of the input.**

I. Introduction

DENSE optical frequency-division multiplexing (OFDM) is a promising method to exploit the vast bandwidth of single-mode optical fiber. A key issue in dense OFDM implementation is the absolute frequency accuracy of each individual channel. Atomic or molecular resonances [1] are commonly used for absolute laser frequency stabilization, but they are not readily available at regular intervals. Wavelength comparison using Fabry–Perot interferometers or fiber-ring resonators [2] provides a regularly spaced frequency comb, but may be limited in precision by uncertainty in resonator length. A promising means to create a precisely spaced comb of frequencies is through large-index angle modulation [3]–[5]. However, the number of generable frequencies is limited by the difficulty in achieving large-index phase or frequency modulation at the required gigahertz modulation frequencies. In addition, the modulation index must be chosen carefully to avoid the zeroes of Bessel functions [6].

In this letter, we propose an alternate method for generating a comb of precisely spaced reference frequencies. The basic concept is to place a phase modulator within a circulating loop, so that the phase modulation is enhanced by multiple passes of light through the modulator. The loop includes an optical amplifier to very nearly

Manuscript received January 26, 1993; revised March 5, 1993. This work was supported by The Hughes Aircraft Company and by National Science Foundation Presidential Young Investigator Award ECS-9157089.

The authors are with Department of Electrical Engineering and Computer Sciences, University of California, Berkeley, CA 94720.

IEEE Log Number 9209445.

1041-1135/93$03.00 © 1993 IEEE