Dublin Institute of Technology
ARROW@DIT

Articles

School of Electrical Engineering Systems

2011-12-05

Integration of UPQC for Power Quality Improvement in Distributed Generation Network – A Review

Shafiuzzaman Khan Khadem
skkhadem@gmail.com

Malabika Basu
Dublin Institute of Technology

Michael Conlon
Dublin Institute of Technology

Follow this and additional works at: http://arrow.dit.ie/engscheleart2

Part of the Controls and Control Theory Commons, and the Power and Energy Commons

Recommended Citation
S. K. Khadem, M. Basu and M. F. Conlon, Integration of UPQC for Power Quality Improvement in Distributed Generation Network – A Review, ISGT Europe 2011, Manchester UK, Dec 2011

This Conference Paper is brought to you for free and open access by the School of Electrical Engineering Systems at ARROW@DIT. It has been accepted for inclusion in Articles by an authorized administrator of ARROW@DIT. For more information, please contact yvonne.desmond@dit.ie, arrow.admin@dit.ie.

This work is licensed under a Creative Commons Attribution-Noncommercial-Share Alike 3.0 License

Integration of UPQC for Power Quality Improvement in Distributed Generation Network – A Review

Shafiuzzaman K Khadem, *Student Member, IEEE*, Malabika Basu, *Member, IEEE* and Michael F Conlon, *Member, IEEE*

***Abstract* - In this paper a technical review of the integration of a Unified Power Quality Conditioner (UPQC) in a distributed generation network is presented. Although the primary task of UPQC is to minimize grid voltage and load current disturbances along with reactive and harmonic power compensation, additional functionalities such as compensation of voltage interruption and active power transfer to the load and grid have also been identified. Connection methodologies with their advantages and disadvantages are also described. Recent improvements in capacity expansion techniques and future trends for the application of UPQC in distributed modes are also identified.**

KEYWORDS

Distribited Power Generation, Microgrid, Power Quality, Unified Power Quality Conditioner

I. INTRODUCTION

The increasing demand of Distributed Generation (DG) in recent years, to minimize the gap between the supply and load demand, is introducing some voltage and current disturbance and harmonics due to the generator types and the interfacing power electronics converters. Therefore, quality of power supply has become an important issue with the increasing demand of DG systems either connected to the grid through grid-tie inverters or work in isolated (microgrid) mode. The need for monitoring of power quality in low voltage distribution levels and ways to mitigate the problems are also increasing due to better customer service, reasonably priced meters, telecommunication development, network planning, operation and regulation requirements [1].

Implementation of Custom Power Devices (CPD) like UPQC in DG or microgrid systems to improve the power quality is gaining greater importance [2-6]. UPQC is the integration of series and shunt active filters, connected back-to-back on the dc side, sharing a common DC capacitor [3] as shown in Figure 1. The series component of the UPQC is responsible for mitigation of the supply side disturbances: voltage sags/swells, flicker, voltage unbalance and harmonics. It inserts voltages so as to maintain the load voltages at a desired level; balanced and distortion free. The shunt component is responsible for mitigating the current quality problems caused by the consumer: poor power factor, load harmonic currents, load unbalance etc. It injects currents in the ac system such that the source currents become balanced sinusoids and in phase with the source voltages.

This paper deals with the review of research work that has been completed so far on this issue. Emphasis has been given on incorporation techniques of UPQC in DG or microgrid system along with their advantages and disadvantages. More DGs such as Photovoltaic or Wind Energy Systems are now penetrating into the grid or microgrid. Again, numbers of non-linear loads are also increasing. Therefore, current research on capacity enhancement techniques of UPQC to cope up with the expanding DG or microgrid system is also reviewed.

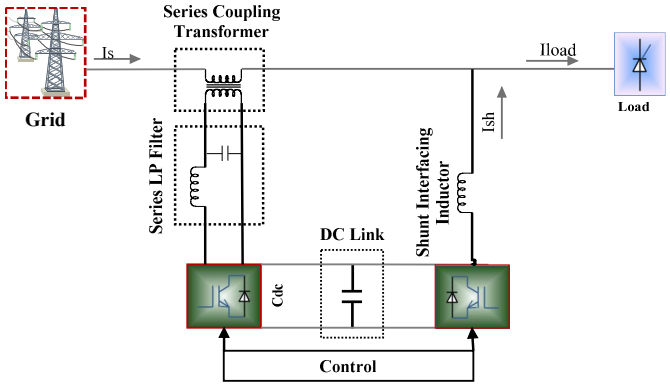

Fig. 1- System Configuration of UPQC

II. INTEGRATION OF UPQC

Recent reports [2-9] show that significant research and development has been carried out on the application of UPQC to DG integrated network. As the UPQC can compensate for almost all existing PQ problems in the transmission and distribution grid, placement of a UPQC in the distributed generation network can be multipurpose. As a part of integration of UPQC in DG systems, research has been done on the following two techniques: DC-Linked and Separated DG-UPQC systems.

[1] S. K. Khadem, M. Basu and M. F. Conlon are with the School of Electrical Engineering Systems, Dublin Institute of Technology, Dublin 8, Ireland (e-mail: skkhadem@gmail.com; mbasu@dit.ie; mbasu@ieee.org; michael.conlon@dit.ie;

A. (DG – UPQC)$_{DC\text{-}linked}$

A structure has been proposed in [2, 4-7], as shown in Figure 2, where DG sources are connected to a DC link in the UPQC as an energy source. This configuration works both in interconnected and islanded mode (shown in Figure 3). In Interconnected mode, DG provides power to the source and loads whereas in islanded mode DG (within its power rating) supplies the power to the load only. In Addition, UPQC has the ability to inject power using DG to sensitive loads during source voltage interruption. The advantage of this system is voltage interruption compensation and active power injection to the grid in addition to the other normal UPQC abilities. The system's functionality may be compromised if the DG resources are not sufficient during the voltage interruption conditions. Economical operation of the system can also be achieved by proper controlling of the active power transfer between the supply and DG source through a series APF [7]. The proposed system can also reduce the investment cost by nearly one fifth if the UPQC and DG are used separately [5].

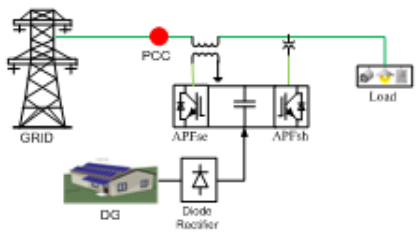

Fig 2 - UPQC with DG connected to the DC link

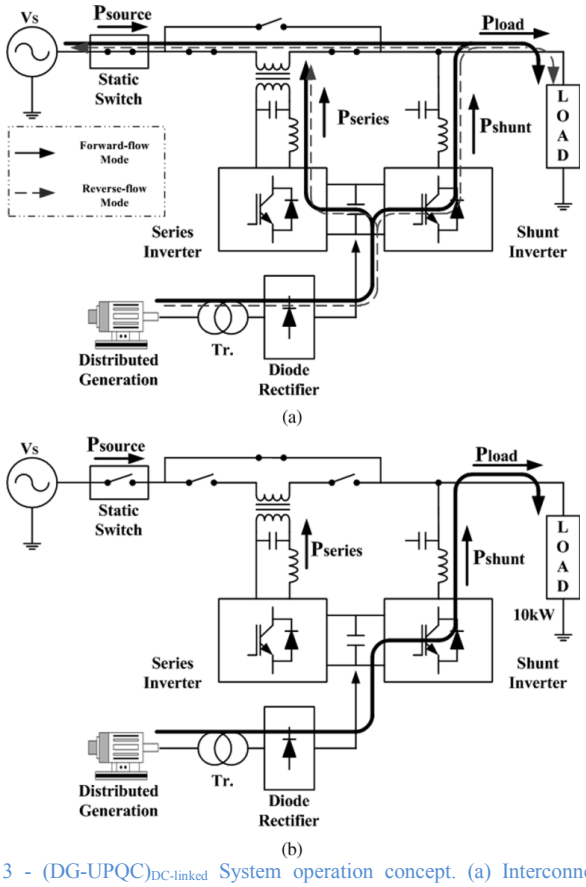

Fig. 3 - (DG-UPQC)$_{DC\text{-}linked}$ System operation concept. (a) Interconnected mode. (b) Islanding mode [2]

B. (UPQC – DG)$_{Separated}$

A typical application of a UPQC might be to overcome the grid integration problems of the DG, such as the fixed-speed induction generator (FSIG) as investigated in [8] and shown in Figure 4. The FSIG fails to remain connected to the grid in the event of a grid voltage dip or line fault due to excessive reactive power requirement. The drop in voltage creates over-speeding of the turbine, which causes a protection trip. With the aid of the UPQC, this fault-ride-through capability is achieved, which greatly enhances system stability. Results show (Figure 5) that the UPQC is one of the best devices for the integration of wind energy system to the grid. In the case of a wind farm connected to a weak grid, UPQC can also be placed at the PCC to overcome voltage regulation problems [9]. In these separated systems, the series APF of the UPQC is placed near the DG side to conduct the voltage regulation by injecting the voltage in phase with PCC voltage. This type of UPQC is referred to as left shunt UPQC [3]. Based on the research study, in addition to the normal functionality of UPQC, some of the other advantages and disadvantages have been identified for the techniques which are given in Table 1.

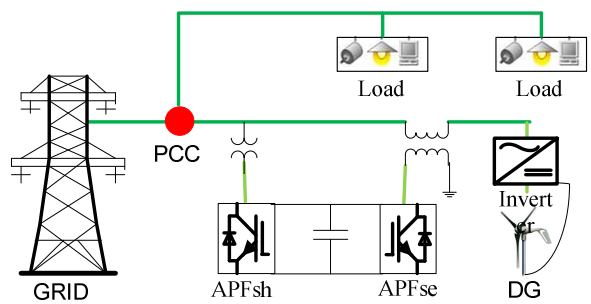

Fig 4 - Grid connected wind energy system with UPQC

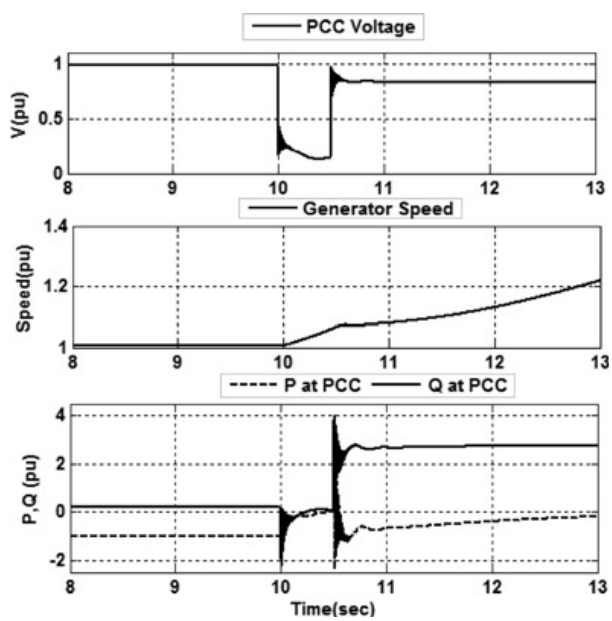

Fig 5- (a) Generator response to a three-phase fault without UPQC [9]

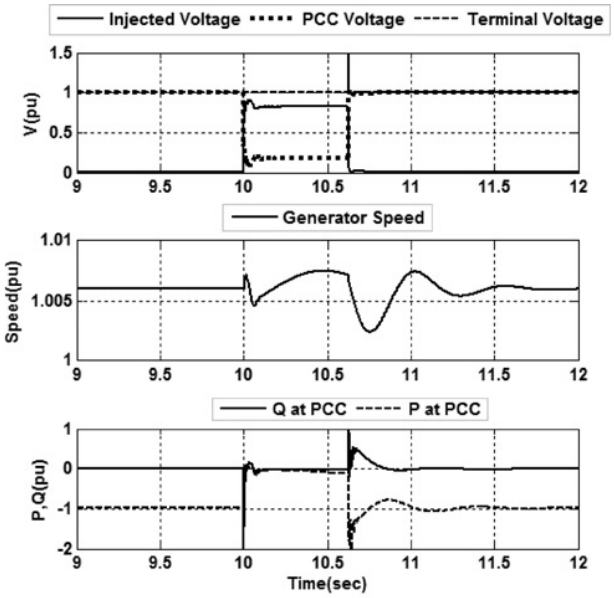

Fig 5 – (b) Generator response to a three-phase fault with UPQC [9]

TABLE 1
COMPARATIVE ANALYSIS OF INTEGRATION TECHNIQUES OF UPQC IN DG SYSTEM

Technique	Advantages	Disadvantages
$(\text{DG-UPQC})_{\text{DC linked}}$	i. Compensate the voltage interruption ii. Operation in islanding mode – possible iii. Active power transfer during grid connected or microgrid mode – possible iv. System cost for PQ improvement - reduced (remove DG Inverter)	i. Control complexity – high ii. Capacity enhancement in multi-level or multi-module mode – difficult
$(\text{UPQC-DG})_{\text{Separated}}$	i. Capacity enhancement in multi-level or multi-module mode - easy ii. Control – easy iii. Active power transfer during grid connected mode - possible	i. Voltage interruption – may not be possible ii. Operation in islanding mode – may not be possible iii. System cost - high

C. Cost Analysis

In terms of required components, it is clear that the combined system does not require the grid connecting interfacing converter and thus the cost will be less. The purpose of the converter is already carried out by the shunt APF in the UPQC system. One the other hand in the separate system two complete units of UPQC and DG unit are required along with the interfacing converter. Therefore, there is no way to reduce the cost. A comparative analysis of investment cost and economical saving of separated and combined UPQC – DG (Wind Energy System) has been done in [5] based on the component cost found in [10]. It is found that, depending on the ratings, the combined system can reduce the cost up to one fifth of the separate system. Table 2 shows the details of this comparison.

TABLE 2
COMPARISON OF INVESTMENT COST AND ECONOMIC SAVING OF SEPARATE AND COMBINED UPQC AND DG (WIND SYSTEM) [2]

	Rating (kVA)					
	15		150		1500	
Equipment	Separate	Combined	Separate	Combined	Separate	Combined
Wind turbine	10515	10515	105004	105004	1050000	1050000
PWM rectifier	5786	5786	47800	47800	394841	394841
Grid side inverter	5786	-	47800	-	394841	-
Shunt inverter	5786	5786	47800	47800	394841	394841
Series inverter	5786	5786	47800	47800	394841	394841
Whole	33662	27876	296202	248702	2629366	2234525
Economic saving (%)	20.7		19.1		17.6	

III. UPQC IN DOUBLE FEEDER DISTRIBUTION SYSTEM

A new connection proposal for UPQC, as shown in Figure 6, to improve the power quality of two feeders in a distribution system has been made in [11] which is termed Interline UPQC (IUPQC). The purpose of the IUPQC is to hold the feeder voltages constant against voltage sag/swell and temporary interruption in either of the two feeders. It has been demonstrated that the IUPQC can absorb power from one feeder to hold the other feeder voltage constant in case of a voltage sag in the other source voltage. This UPQC can also be implemented in a Custom Power Park or Microgrid system. This can further be improved as a multi-converter based UPQC [12] where multiple VSI are connected back to back on the dc side.

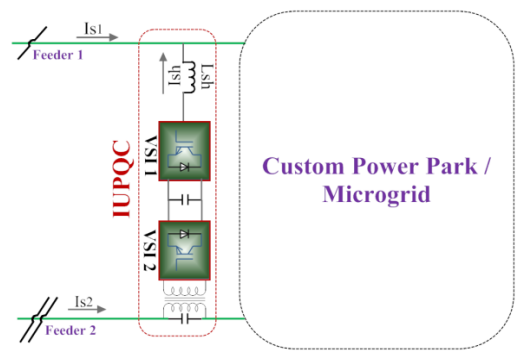

Fig 6 – (a) Typical IUPQC connected in a distribution system

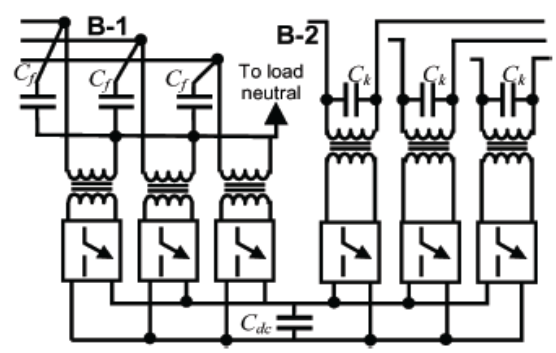

Fig 6 – (b) Internal Structure of IUPQC [11]

IV. CAPACITY ENHANCEMENT OF UPQC

In high power applications, the filtering task cannot be performed for the whole spectrum of harmonics by using a single converter due to the limitations on switching frequency and power rating of the semiconductor devices. Therefore, compensating the reactive harmonic components to improve the power quality of the DG integrated system as well as to avoid the large capacity centralised APF, parallel operation of multiple low power APF units are increasing. Like APF, UPQC can also be placed at the PCC or at a high voltage distribution line as a part of DG integrated network or in microgrid system to work both in interconnected or islanded mode. At this place, capacity enhancement is achieved by using Multi-level topologies to reach the higher power levels. These options are as follows:

i. Multi-level converter based UPQC
ii. Multi-module converter based UPQC
iii. Multi-module (power cell) unit based UPQC

A multi-level converter is proposed to increase the converter operation voltage, avoiding the series connection of switching elements. However, the multilevel converter is complex to form the output voltage and requires an excessive number of back-connection diodes or flying capacitors [13] or cascade converters [14]. A basic form of multi-level UPQC is shown in Figure 7.

A multi-module H-bridge UPQC can also be connected to the distribution system without series injection transformers. It has the flexibility in expanding the operation voltage by increasing the number of H-bridge modules [15], as shown in Figure 8. Here each phase consists of several pairs of H-bridge modules isolated through a single-phase multiwinding transformer.

These Multi-module techniques [1318] allow the symmetrical distribution of the load power among the components of the topology, but the classical design procedure must be modified or refined to ensure the power cell components should be within its maximum ratings. Therefore, a new design procedure of UPQC with a feature of extending capacity based on a modular approach is presented in [19-20], shown in Figure 9, where H-bridge power cells are added in each single phase arrangement depending on the required compensating power. Some advantages and disadvantages are also outlined in Table3.

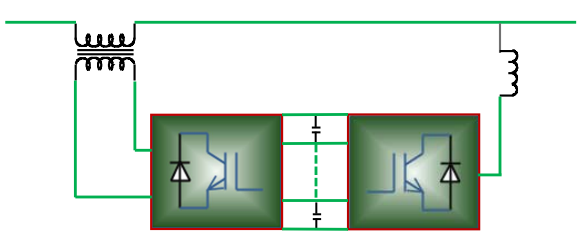

Fig. 7 – Multi level Converter based UPQC

TABLE 3
ADVANTAGES AND DISADVANTAGES FOR DIFFERENT TYPES OF UPQC IN CAPACITY EXPANSION.

Type of UPQC	Advantages	Disadvantages
Multi-level Converter based	i. High voltage and current can be achieved ii. Can be developed in different ways – diode clamp / flying capacitor / cascade inverter based	i. Voltage unbalance could occur between the different levels ii. Requires accessive number of diode / flying capacity / inverter iii. Central control is required and it is complicated iv. Conduction loss is high v. Capacity expansion is difficult vi. Centralized Approach
Multi-modular transformer-less	i. No series transformer is required, thus reduces the cost ii. Capacity expansion is easier than multi-level converter iii. Redundancy is possible	i. It requires high number of switching devices to enhance the capacity ii. Central control is required iii. Conduction loss and switching loss also high iv. Due to symmetrical distribution of the load power among the H-bridge inverters, modules may not work at its maximum rating
Multi-modular (power cell)	i. Single phase power cell topology helps the unit to work at its maximum rating ii. Capacity expansion is easier iii. Redundancy is possible iv. Both Central and Distributed controls are possible v. Due to parallel mode of operation, conduction loss can be reduced	i. Number of H-bridge switching device increases, thus increase the switching loss ii. Transformer for each shunt part of the power cell could increase the loss as well as make the system bulky iii. Additional single shunt unit may not be included if only the required compensating current increases

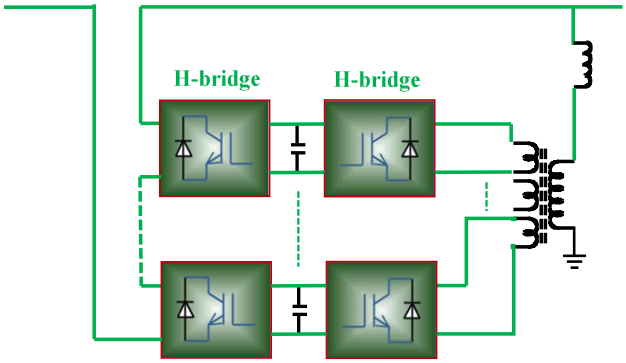

Fig 8 – Series transformer-less Multi-module H-bridge

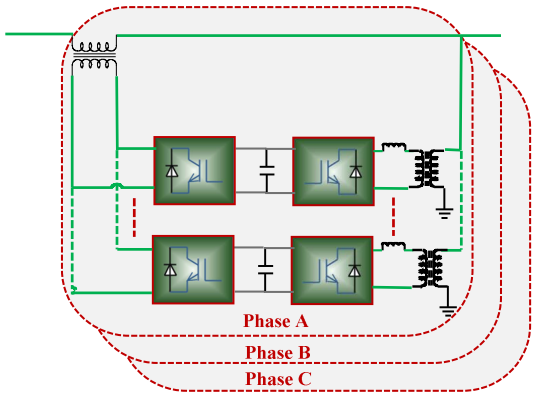

Fig 9 – Modular approach of UPQC based on power cells

V. CONCLUSION

- It is found that research in recent years has placed more emphasis on CPDs, especially on UPQC, and its application in DG or microgrid system.
- Single or modular type UPQC has been proposed to deal with power quality issues, with an addition to voltage interruption compensation, active power transfer, related to DG with integrated or microgrid mode.
- Capacity enhancement has been achieved using multi-level or multi-module and central control mode, however, the flexibility of UPQC to increase its capacity in future and to cope up with the increase load demand in low voltage distribution level has not been achieved.
- The economics for the capacity enhancement of UPQC should also be analysed.

VI. REFERENCE

[1] P Jarventausta, S Repo, A Rautianinen, J Partanen, "Smart grid power system control in distributed generation environment", Annual Reviews in Control 34, 2010, pp. 277 – 286

[2] B Han, B Bae, H Kim, S Baek, "Combined Operation of Unified Power Quality Conditioner with Distributed Generation", IEEE Trans Power Delivery, vol. 21(1), 2006, pp. 330 – 338

[3] A Ghosh and G Ledwich, "Power quality enhancement using custom power devices", Kluwer Academic, 2002

[4] M Hosseinpour, Y Mohamadrezapour, S Torabzade, "Combined operation of Unifier Power Quality Conditioner and Photovoltaic Array", Journal of Applied Sciences, 2009, v-9(4), pp 680-688

[5] M Hosseinpour, A Yazdian, M Hohamadian, J Kazempour, "Desing and Simulation of UPQC to Improve Power Quality and Transfer Wind Energy to Grid", Jour of Applied Sciences, 2008, vol. 8(21), pp. 3770 – 3782.

[6] M A Emran, M Forghani, M Abedi, G B Gharehpetian, "Combined Operation of UPQC and Fuel Cell with Common DC Bus", ICREPQ 2008

[7] G S Reddy, "Feasibility analysis of DGSC-UPQC", IJRRAS, vol 4(1), 2010, pp. 32-47

[8] N G Jayanti, M Basu, M. F. Conlon and K. Gaughan "Rating requirements of the unified power quality conditioner to integrate the fixed speed induction generator-type wind generation to the grid", IET Renewable Power Generation, vol. 3(2), 2009, pp. 133-143

[9] M F Farias, P E Battaiotto, M G Cendoya, "Wind Farm to Weak-Grid connection using UPQC Custom Power Device", ICIT 2010, pp. 1745 – 1750

[10] J K Kaldellis, K A Kavadias, "Cost-benefit analysis of remote hybrid wind-diesel power stations: Case study Aegean Sea Islands", Energy Policy, vol 35, 2007, pp. 1525-1538

[11] A Kumar, "A Ghosh, Interline Unified Power Quality Conditioner", IEEE Trans Power Delivery, Vol. 22(1), 2007, pp. 364-372.

[12] H R Mohammadi, A Y Varjani, "Multiconverter Unified Power-Quality Conditioning System: MC-UPQC", IEEE Trans Power Delivery, Vol. 24(3), 2009, pp. 1679-1686.

[13] J Lai, F Z Peng, "Multilevel converters-a new breed of power converters", IEEE Trans Ind Appl, Vol. 32(3), 1996, pp. 509 - 517

[14] F Z Peng, J W McKeever and D J Adams, "A Power Line Conditioner Using Cascade Multilevel Inverters for Distribution Systems", IEEE Trans Ind Appl, Vol 34(6), 1998, pp. 1293 – 1298

[15] B. Han, B. Bae, S. Baek and G. Jang, "New Configuration of UPQC for Medium-Voltage Application", IEEE Trans Power Delivery, Vol. 21(3), 2006, pp. 1438 – 1444

[16] B. Han, S. Baek, H. Kim, and G. Karady, "Dynamic characteristic analysis of SSSC based on multibridge inverter," IEEE Trans. Power Del. Vol. 17(2), 2002, pp. 623–629

[17] B.-M. Han and P. Mattavelli, "Operation analysis of novel UPFC based on 3-level half-bridge modules," in Proc. IEEE Bologna Power Tech Conf., Jun. 2003, vol. 4, pp. 307–312.

[18] J. Muñoz, J. Reyes, J. Espinoza, I. Rubilar, and L. Morán, "A novel multi-level three-phase UPQC topology based on full-bridge single-phase cells," in Proc. Conf. Rec. IEEE IECON, Nov. 2007, pp. 1787–1792.

[19] J A Munoz, J R Espinoza, "Design of a Modular UPQC Configuration Integrating a Components Economical Analysis", IEEE Trans Power Delivery, Vol. 24(4), 2009, pp. 1763-1772.

[20] J A Muñoz, J R Espinoza, C R A Morán, E Espinosa, P E Melín, D G Sbárbaro, "Design of a Discrete-Time Linear Control Strategy for a Multi-Cell UPQC", accepted for publication in IEEE Trans Ind Electr, 2011

VII. BIOGRAPHIES

Shafiuzzaman K Khadem (S'09) received the B.Sc (hons) and M.Sc degrees in Applied Physics and Electronics from University of Dhaka, Bangladesh, in 1998 and 2000 respectively.

From 2001, he worked as a Research Associate in Renewable Energy Research Centre, University of Dhaka, Bangladesh for 6 years. In 2006, he joined as a Lecturer in the Electronics and Telecommunication Engineering Dept, University of Liberal Arts Bangladesh. From 2009, he started his PhD research on Power Quality improvement of DG Integrated Network using Unified Power Quality Conditioner.

Malabika Basu (S'99–M'03) received the B.E. and M.E. degrees in electrical engineering from Bengal EngineeringCollege, Shibpur,Kolkata, India, in 1995 and 1997, respectively, and the Ph.D. degree in electrical engineering from Indian Institute of echnology, Kanpur, Uttar Pradesh, India, in 2003.

From 2001 to 2003, she was a Lecturer in Jadavpur University, Kolkata, West Bengal, India. From 2003 to 2006, she was Arnold F. Graves Postdoctoral Fellow at Dublin Institute of Technology, Dublin, Ireland, where she has been a Lecturer, since 2006. She has authored or coauthored more than 40 technical publications in various international journals and conference proceedings. Her current research interests include grid integration of renewable energy sources, power quality conditioners and power quality control and analysis, photovoltaics and wind energy conversion, and smart grid and microgrids.

Michael F. Conlon (M'88) received the B.Sc. from Dublin Institute of Technology, Dublin, Ireland, in 1982, the M.Eng.Sc. degree by research and the Ph.D. degree from the University College, Galway, Ireland, in 1984 and 1987, respectively, all in electrical engineering.

He was at Monash University and Victorian Energy Networks Corporation, Melbourne, Vic., Australia. Currently, he is the Head of the Department of Control Engineering at the Dublin Institute of Technology, Dublin, Ireland. His research interests include power systems analysis and control applications, power systems economics, integration of wind energy in power networks, and quality of supply and reliability assessment.