Dublin Institute of Technology
ARROW@DIT

Conference papers

School of Electrical and Electronic Engineering

2002-01-01

Closed loop identification of a first order plus dead-time process model under PI control

Tony Kealy
Dublin Institute of Technology

Aidan O'Dwyer
Dublin Institute of Technology, aidan.odwyer@dit.ie

Follow this and additional works at: http://arrow.dit.ie/engscheleart

Part of the Controls and Control Theory Commons

Recommended Citation

Kealy, Tony and O'Dwyer, Aidan : Closed loop identification of a first order plus dead-time process model under PI control. Proceedings of the Irish Signals and Systems Conference, pp. 9-14, University College Cork, June, 2002.

This Conference Paper is brought to you for free and open access by the School of Electrical and Electronic Engineering at ARROW@DIT. It has been accepted for inclusion in Conference papers by an authorized administrator of ARROW@DIT. For more information, please contact yvonne.desmond@dit.ie, arrow.admin@dit.ie.

This work is licensed under a Creative Commons Attribution-Noncommercial-Share Alike 3.0 License

Proceedings of the Irish Signals and Systems Conference, University College, Cork, June 2002, pp. 9-14

Closed Loop Identification Of A First Order Plus Dead Time Process Model Under PI Control

Tony Kealy[ϕ] and Aidan O'Dwyer[*]

[ϕ]School of Control Systems and Electrical Eng.
Dublin Institute of Technology
Kevin Street
Dublin 8
IRELAND
E-mail: [ϕ]tony.kealy@dit.ie

[*]School of Control Systems and Electrical Eng.
Dublin Institute of Technology
Kevin Street
Dublin 8
IRELAND
[*]aidan.odwyer@dit.ie

Abstract -- **This paper discusses the estimation of the parameters of a first order plus dead-time process model using the closed-loop step response data of the process under proportional plus integral (PI) control. The proportional gain and the integral time, in the PI controller, are chosen such that the closed-loop step response exhibits an under-damped response. From this response data, five characteristic points are used to determine a second order plus dead-time model and subsequently, the frequency response of the closed-loop system. Knowing the dynamics of the closed-loop system and the dynamics of the controller, the open-loop dynamics of the process can be determined by separating the dynamics of the controller from the closed-loop dynamics.**

Keywords – **Closed-loop identification; PI controller; Under-damped step response; Frequency response.**

I. INTRODUCTION

To develop a mathematical model for a process is often the first step undertaken in the design of a controller. It has been recognized that a first or second-order-plus-dead-time model may in general represent process dynamics. A considerable number of system identification methods have been reported and they are generally classified into parametric and non-parametric approaches. Transfer functions might be the most welcome parametric model. Process models described by transfer functions play a vital role in process analysis, control and optimisation. To obtain a transfer function description of a process, identification methods may be sorted into two categories, open-loop types and closed-loop types. In earlier years, the first order plus dead-time (FOPDT) model of the process was estimated from the process reaction curve obtained from an open-loop step response of the process, with the risk of process runaway. Few processes exhibit oscillatory tendencies (to a step input) in the absence of feedback. Yuwana and Seborg [1] (YS) developed a method to approximate a process by a FOPDT model from the under-damped closed-loop step response data; the closed-loop system was under proportional control. Jutan and Rodriguez [2] improved the YS method by using a higher-order approximation of the delay in the closed-loop transfer function denominator. Lee [3] modified the YS method by matching the dominant poles of the closed-loop system with those of an apparent second-order plus dead-time (SOPDT) transfer function, to determine the model parameters. Chen [4] extended the YS method by determining the process ultimate data directly from the closed-loop step response.

The practical advantages of the Yuwana and Seborg [1] method and its derivatives are that they require only a single closed-loop test and the algorithms are simple. The main disadvantage is that the test is performed under proportional control, which introduces steady-state offset during testing and consequently produces off-specification products. In the method proposed in this paper, the test is performed in closed-loop under PI control. Consequently, steady-state offset is eliminated. Since most of the controllers in industry are inherently PI controllers, previous knowledge of the operation of the controllers on the plant can be

useful when selecting the test PI parameters, K_C and T_I.

II. THE METHOD

The proposed method is defined by Mamat and Fleming [5] and considers a standard feedback control structure, as shown in Figure 1, where $G_C(s)$ is the PI controller transfer function:

$$G_C(s) = K_C(1 + \frac{1}{T_I s}) \tag{1}$$

and $G_P(s)$ is the FOPDT process model to be identified:

$$G_P(s) = \frac{K_P e^{-d_P s}}{1 + \tau_P s} \tag{2}$$

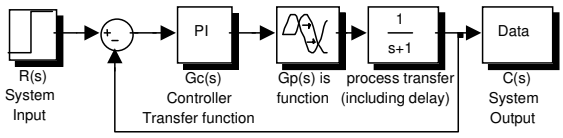

Figure 1: Block diagram of standard feedback control system.

If K_C and T_I are chosen such that the closed-loop system exhibits an under-damped response, as shown in Figure 2, then the closed-loop response can be **approximated** (Mamat and Fleming [5]) by a second order plus dead-time transfer function:

$$G_{CL}(s) = \frac{C(s)}{R(s)} = \frac{K e^{-ds}}{\tau^2 s^2 + 2\zeta\tau s + 1} \tag{3}$$

From the time domain solution of equation (3), it can be shown (Mamat and Fleming [5]), that

$$K = \frac{Css}{A} \tag{4}$$

$$\zeta = \sqrt{\frac{\rho^2}{1+\rho^2}} \tag{5}$$

$$\tau = \frac{(tp2 - tp1)\sqrt{1-\zeta^2}}{2\pi} \tag{6}$$

$$d = \frac{Sc}{Css} - 2\zeta\tau \tag{7}$$

with

$$\rho = -\frac{1}{2\pi}\ln\left[\frac{Cp2 - Css}{Cp1 - Css}\right] \tag{8}$$

where Css, Cp1, Cp2, tp1 and tp2 are defined in Figure 2. The magnitude of the set-point change is labelled A, and Sc is the characteristic area defined by:

$$Sc = \int_0^\infty [Css - C(t)]dt \tag{9}$$

From the values of K, ζ, τ and d above, the frequency response of the closed-loop system, $G_{CL}(j\omega)$, can be determined. Knowing the dynamics of the closed-loop system $G_{CL}(j\omega)$ and the dynamics of the controller $G_C(j\omega)$, the open-loop dynamics of the process $G_P(j\omega)$ can be determined by separating the dynamics of the controller from the closed-loop dynamics.

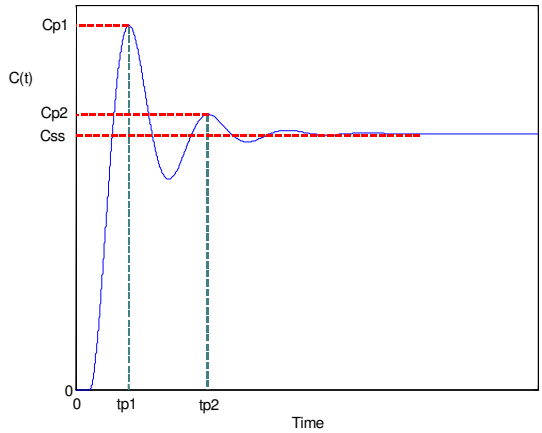

Figure 2: Typical under-damped closed-loop step response under PI control.

To clarify the operation of the proposed method, a "known" process is simulated using the MATLAB/SIMULINK software and the identification parameter results compared with the "correct" values.

$$G_P(s) = \frac{e^{-s}}{1+s} \qquad \text{Process (1)}$$

This process is in closed-loop with a PI controller (see Figure 1) where the proportional gain is set to 1 and the integral time is set to 1 second. A step input, R(s) = 1, is applied to this system and the resulting output data is used to determine the parameters of a second order plus dead-time **approximation** of the closed-loop system in the time domain. The

parameters of this approximation are calculated using the characteristic points Cp1, Cp2, Css, tp1 and tp2 as shown in Figure 2 and equations 4, 5, 6, 7, 8 and 9. The values are calculated as follows:

Cp1 = 1.5008, Cp2 = 1.1122, Css = 1, tp1 = 3 seconds, tp2 = 7.71 seconds.
K = 1, ρ = 0.2381, ζ = 0.2316, τ = 0.7292, Sc = 1.0001 and d = 0.6623 seconds.

The K, ζ, τ and d values are inserted into equation (3) to give the closed-loop second order approximation of the overall system.

The frequency domain is now used to determine critical points of the system. The proposed method is similar to the Mamat and Fleming [5] technique with the main difference being the method of determining the phase crossover frequency, ω_C , and the magnitude at this frequency, M, of the second order approximation of the closed-loop system. Mamat and Fleming [5] suggest determining ω_C by solving a non-linear equation. This non-linear equation has an "Inverse Tangent" function included and is a difficult equation to solve. The proposed method uses the software package, MATLAB, to plot the frequency response and from this response, uses MATLAB commands to determine ω_C and M. The frequency response of the second order approximation is obtained using the **bode** command in MATLAB. **Bode(sys)** draws the bode plot of the LTI model **sys**, created with the **tf** command. The frequency range and number of points are chosen automatically.

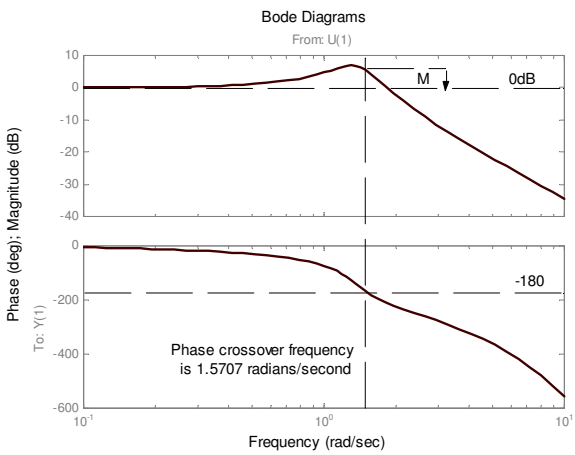

Figure 3: Bode diagram of second order approximation of the closed loop system.

From Figure 3, the phase crossover frequency and the magnitude at the phase crossover frequency are obtained using the following MATLAB commands:
>>[mag,phase,w] = bode(sys,w);
>>[gm,pm,wcp,wcg] = margin(mag,phase,w)
giving
gm = 0.6163: pm = -31.1418: wcp = 1.5705: wcg = 1.8323.

[gm, pm, wcp, wcg] = margin(mag,phase,w) derives the gain and phase margins from the bode magnitude, phase, and frequency vectors MAG, PHASE, and W produced by bode. Interpolation is performed between the frequency points to estimate the values.
From the bode plot in Figure 3, the magnitude of the gain, M, at the phase crossover frequency, ω_C = 1.5705 rads/sec., is equal to (1/0.6163) = 1.62. It can be shown (Mamat and Fleming [5]), that at the phase crossover frequency ω_C

$$\left|GcGp(j\,\omega_C)\right| = \frac{\left|Gcl(j\,\omega_C)\right|}{1+\left|Gcl(j\,\omega_C)\right|} \tag{10}$$

and

$$\angle GcGp(j\,\omega_C) = 0 \tag{11}$$

where $\angle$GcGp(jω_c) is the phase angle of the loop transfer function at ω_C . Substituting equations (1) and (2) into equations (10) and (11), and solving for d_P and τ_P , the parameters of the FOPDT model are given by the following equations:

$$\tau_P = \frac{\sqrt{(1+M)^2\,(KcKp)^2\,(1+T_I^2\,\omega_C^2) - M^2\,T_I^2\,\omega_C^2}}{M\,\omega_C^2\,T_I} \tag{12}$$

$$d_P = \frac{1}{\omega_C}\left[\tan^{-1}(\omega_C\,T_I + \tan^{-1}(\frac{1}{\tau\,\omega_C})\right] \tag{13}$$

$$K_P = \frac{T_I}{K_C\,S_C}\,C_{SS} \tag{14}$$

(The equation for determining τ_P, equation 12, is a corrected version of the equation given by Mamat and Fleming [5]).

The results of the estimations (with the Mamat and Fleming [5] results in brackets for comparison) are as follows: Process gain, K_P = 0.9999 (0.99). Process delay, d_P = 1.0962 (0.99), Process time constant, τ_P = 1.0415 (1.04). The "correct" value for each of these parameters is 1. The three estimated parameter values of the FOPDT model are inserted into a MATLAB/SIMULINK file and the model open-loop step response compared with the process

open-loop step response. A Nyquist plot of the FOPDT model and process is also drawn for validation of the proposed method.

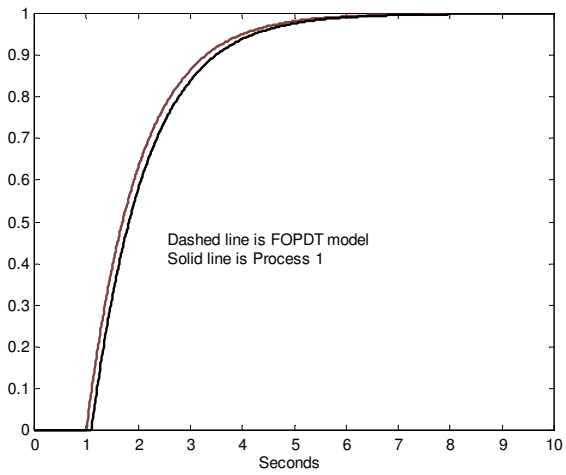

Figure 4: Open loop step response of process (1), and FOPDT model of process (1).

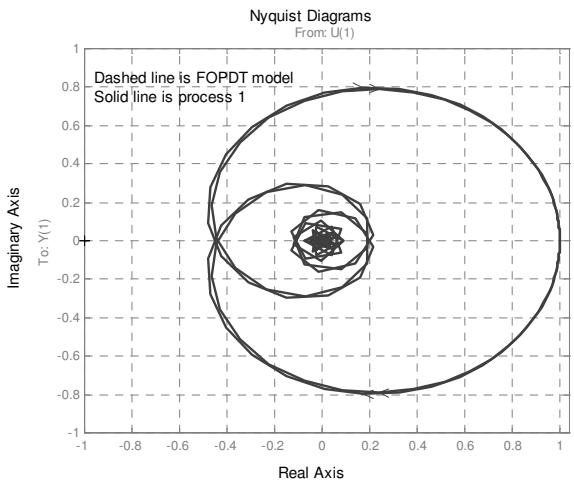

Figure 5: Nyquist plot for process (1), and FOPDT model of process (1).

The quality of the "fit" between process (1) and the first order plus dead-time model of process (1) compares well with the results obtained by Mamat and Fleming [5]. A second simulated process is then examined using the same methods and the results compared as before. This is a third order plus delay process, process (2).

$$G_P(s) = \frac{e^{-3s}}{(s+1)^2(1+2s)} \qquad \text{Process (2)}$$

The PI controller values, K_C = 0.6 and K_I = 0.2, ensures an under-damped closed-loop step response. The parameter values for the second order approximation, (equation (3)) are K = 1, ζ = 0.2636, τ = 3.1642 and d = 3.3292. From the bode plot, the phase crossover frequency, ω_C = 0.3529 rads/sec. and magnitude, M = 1.53, are determined. Using equations 12, 13 and 14, the following first order plus dead-time model parameter values are obtained with the Mamat and Fleming [5] results in brackets for comparison: K_P = 0.9993 (1.00), D_P = 4.3759 (4.69) and T_P = 2.5755 (2.59).

Figures 6 and 7 show comparisons of the process and model obtained.

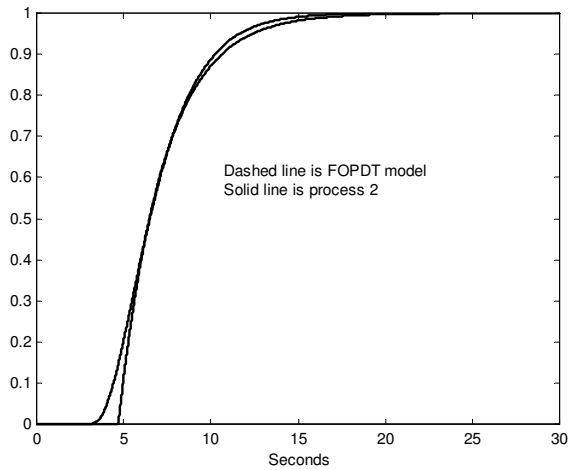

Figure 6. Open loop step response of process (2), and FOPDT model of process (2).

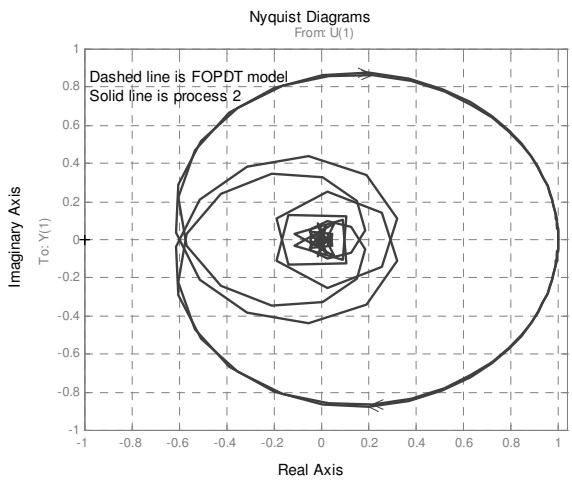

Figure 7: Nyquist plot for process (2), and FOPDT model of process (2).

III. EXPERIMENTAL WORK

The method described in this paper is now implemented on a real process, the Process Trainer PT326 from Feedback Instruments Ltd., using MATLAB/Simulink/Humusoft software and the AD512 Data Acquisition Card. Signals are

transmitted between the PC and the Process Trainer PT326 via a 37-core cable and connector block. The Process Trainer is in closed-loop with a PI controller, figure 8. The PI controller settings are as follows:
Proportional gain = 1.416
Integral time = 0.68 seconds.

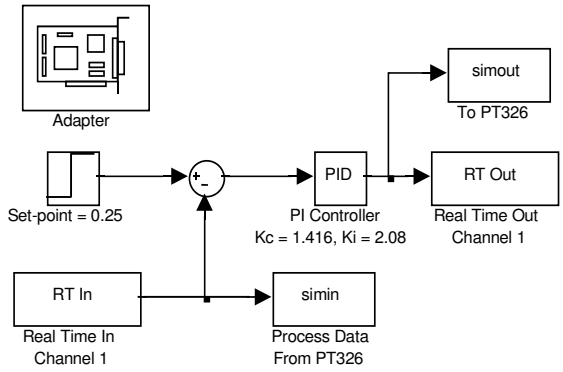

Figure 8. File used, in closed loop under PI control, for identification of FOPDT model of Process Trainer PT326.

A step input, magnitude = 0.25, is applied to the closed-loop system and the step response data plotted to determine the five characteristic points required for the identification of the FOPDT model, as shown in figure 2. The values are determined to be:

- Css = 0.2497
- Cp1 = 0.3354
- Cp2 = 0.2695
- tp1 = 0.93 seconds
- tp2 = 2.625 seconds

A second order approximation of the closed-loop system is determined using equations 4, 5, 6, 7, 8 and 9. From the bode plot in MATLAB, the phase crossover frequency is found to be 4.1543 rads/sec. and the magnitude at this frequency is 1.88. The parameters of the FOPDT model are given by equations 12, 13 and 14 as follows:

- Km = 1.1757
- τm = 0.605 seconds
- *d*m = 0.4748 seconds

Figures 9 and 11 show comparisons of the open loop step response and frequency response of the Process Trainer PT326 and the FOPDT model of the Process Trainer.

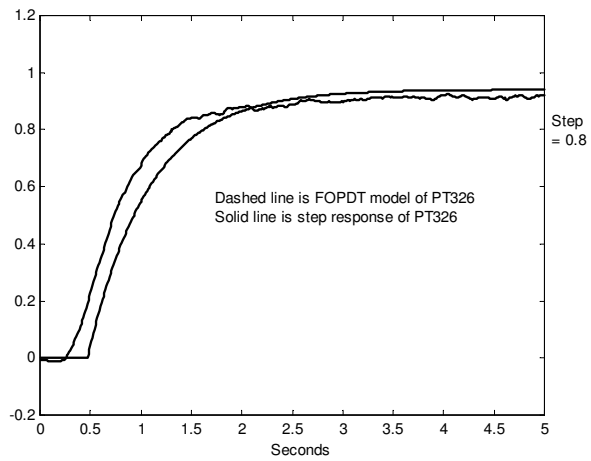

Figure 9. Open loop step response of Process Trainer PT326 and FOPDT model of PT326.

The frequency response of the Process Trainer is obtained by transmitting sine waves of constant magnitude and varying frequency to the input of the process, and plotting the output from the process. The file to achieve this is shown in figure 10.

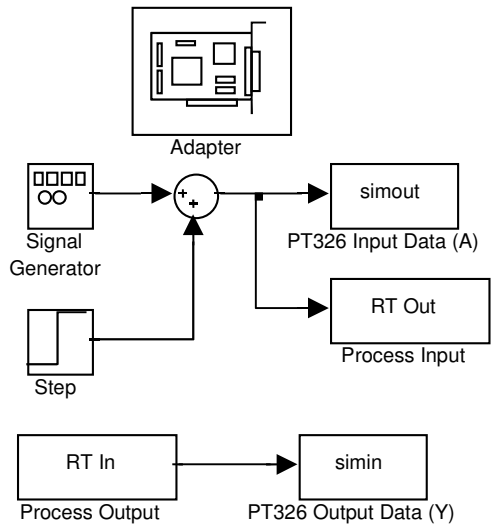

Figure 10. File used to determine frequency response of Process Trainer PT326.

The step size in figure 10 is set to 0.3. The signal generator output is set to a sine wave of amplitude 0.25 with the frequency, in radians/second, varying between 0 radians/second to 20 radians/second. Thirty-five different frequencies are examined between these values. The results enable the Process Trainer nyquist plot to be drawn. To draw the nyquist plot of the FOPDT model, **nyquist(sys)** draws the nyquist plot of the LTI model sys, created with the **tf** command in MATLAB. The frequency

range and number of points are chosen automatically.

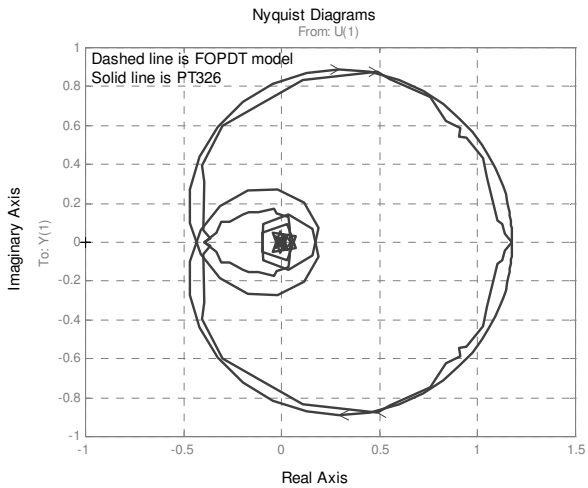

Figure 11. Nyquist plot for Process Trainer PT326, and FOPDT model of Process Trainer.

IV. CONCLUSIONS

Simulation results show that the implementation of the method for the on-line identification of a first order plus dead-time process model compares well with that of Mamat and Fleming [5]. The accuracy of the method is demonstrated in Figure 4 where an open-loop step response and frequency response of both process (1) and the first order plus dead-time model of process (1) are plotted on the same figure. Similar work is carried out on Process (2) and shown in Figure 5. The identification method is then implemented on the Process Trainer PT326 and comparisons are made between the process and the model in the time domain and in the frequency domain. The results show that the FOPDT model is a close representation of the corresponding processes. Compared with the open-loop system identification methods, closed-loop methods are often more desirable in industrial applications because they cause less disruption to the operation of the system. It is believed that such closed-loop methods, with a current PI controller, should generate data that is informative for the identification of a process model, which may be used for determining the parameters of an updated PI or PID controller, using tuning rules. O'Dwyer [6] has shown that almost 50% of all tuning rules for PI and PID compensated processes are designed for the FOPDT process model.

REFERENCES

[1] Yuwana, M., and Seborg, D.E.: 'A new method for on-line controller tuning', AIChE J., 1982, 28 (3), pp. 434 – 440.

[2] Jutan, A., and Rodriguez, E.S.: 'Extension of a new method for on-line controller tuning', Can. J. Chem. Eng., 1984, 62, pp. 802 – 807.

[3] Lee, J.: 'On-line PID controller tuning from a single, closed-loop test', AIChE J., 1989, 35 (2), pp. 329 – 331.

[4] Chen, C.L.: 'A simple method for on-line identification and controller tuning', AIChE J., 1989, 35 (12), pp. 2037 – 2039.

[5] Mamat, R., and Fleming, P.J.: 'Method for on-line identification of a first order plus dead-time process model', Electronic Letters, 20th July 1995, Vol. 31, No.15, pp. 1297 – 1298.

[6] O'Dwyer, A. "PI and PID controller tuning rules for time delay processes: a summary", Technical Report AOD-00-01 Version 2, Dublin Institute of Technology, Ireland.