Dublin Institute of Technology
ARROW@DIT

Conference papers

School of Electrical and Electronic Engineering

2003-01-01

Comparison of process identification techniques in the time and frequency domains

Tony Kealy
Dublin Institute of Technology

Aidan O'Dwyer
Dublin Institute of Technology, aidan.odwyer@dit.ie

Follow this and additional works at: http://arrow.dit.ie/engscheleart

Part of the Controls and Control Theory Commons

Recommended Citation

Kealy, Tony and O'Dwyer, Aidan :Comparison of process identification techniques in the time and frequency domains. Proceedings of ICSE 2003 (Sixteenth International Conference on Systems Engineering), pp. 350-354, Coventry, UK, September, 2003.

This Conference Paper is brought to you for free and open access by the School of Electrical and Electronic Engineering at ARROW@DIT. It has been accepted for inclusion in Conference papers by an authorized administrator of ARROW@DIT. For more information, please contact yvonne.desmond@dit.ie, arrow.admin@dit.ie.

This work is licensed under a Creative Commons Attribution-Noncommercial-Share Alike 3.0 License

Proceedings of ICSE (16th International Conference on Systems Engineering, Coventry, UK, September 2003, pp. 350-354.

COMPARISON OF PROCESS IDENTIFICATION TECHNIQUES IN THE TIME- AND FREQUENCY-DOMAINS.

Kealy T and O'Dwyer A

School of Control Systems and Electrical Engineering,
Dublin Institute of Technology, Kevin Street, Dublin 8, Ireland.
tony.kealy@dit.ie (00353 1 4022862) *aidan.odwyer@dit.ie (00353 1 4024875)*

Keywords: System Identification; First-order-plus-dead-time model; Second-order-plus-dead-time model.

Abstract

This paper describes ten methods to identify a mathematical model for a real process with a time delay. The process is the Process Trainer, PT326 from Feedback Instruments Limited. Six of the methods use step response data and one of the methods uses impulse response data for identification. Two of the methods use frequency response data and the final method uses information from relay-based experiments. The best results are obtained using a combined analytical and gradient method [6] in the frequency-domain and, in the time-domain, using the two-point algorithm [1] and a method proposed by Suganda *et al.* [5].

1 Introduction

The dynamics of a process can be determined from the response of the process to pulses, steps, sine waves, ramps, or other deterministic signals. The dynamics of a linear system are, in principle, uniquely given from such frequency or transient response experiments. Such experiments require that the system be at rest before the input is applied. Models obtained from such experiments are sufficient for PID controller tuning.

The methods are implemented using the following tools:

- MATLAB
- SIMULINK
- Humusoft Real Time Toolbox
- AD512 Data Acquisition Card plugged into ISA port
- Process Trainer PT326
- 37-pin D-type connector, 37-way cable and connector block

2 Time-Domain - Open Loop Methods

The first three methods, of the ten investigated, use open loop step response data to identify a process model.

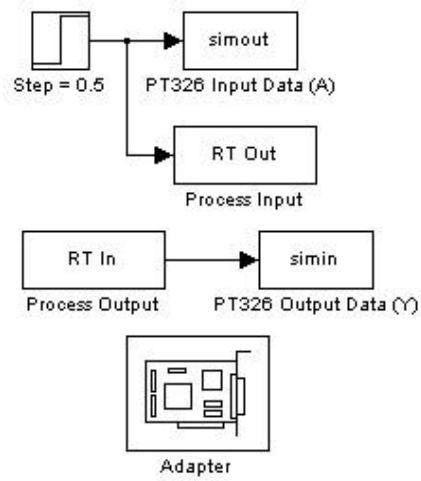

Figure 1. MATLAB/SIMULINK/Humusoft file used in open-loop system identification tests.

These methods are 1: Deduction of model directly from process response (graphical approach), 2: Two-point algorithm (Eq. 2 & 3) [1], 3: Area method (Fig. 2) [2]. A step is applied to the process and the resulting data from the process is examined to deduce the required information. The model obtained is a parametric model, the first-order-plus-dead-time (FOPDT) model. This model is characterised by three parameters: the static gain K_m, the time constant t_m, and the dead time d_m. The model is by far the most commonly used model for Proportional/Integral/Derivative (PID) controller tuning. The process model transfer function is shown in equation 1.

$$G_m(s) = \frac{K_m e^{-d_m s}}{1 + t_m s} \qquad (1)$$

In the graphical approach, the process gain is determined by dividing the steady state output by the input set-point value and the time constant is the time taken for the output to reach 63% of the final value, less the dead time. The dead time is the time interval between the input being applied to the system and the output responding to this signal.

In the two-point algorithm approach, the steady state gain is determined as in the graphical method. The time taken for the process output to reach 28% and 63% of the final steady state output is used to determine the time constant and the dead time based on solving the following simultaneous equations:

$$T_{63} = d_m + t_m \quad (2)$$

$$T_{28} = d_m + \frac{t_m}{3} \quad (3)$$

The third method is the area method and is based on integrals of the step response. The algorithm integrates areas from the open loop step response data and from the resulting values, the time constant and the dead time are calculated. Figure 2 gives some details.

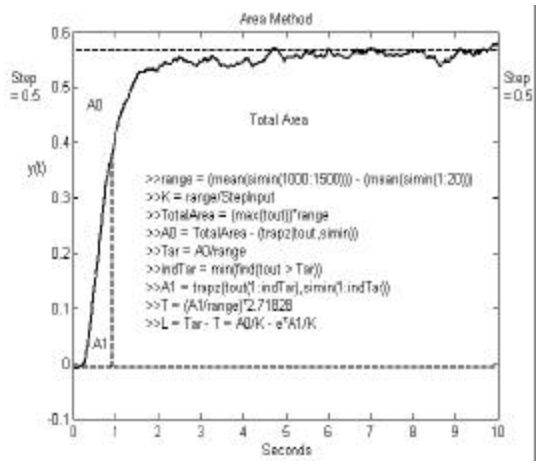

Figure 2. Plot of process open loop step response and areas used in area method algorithm.

The average residence time, T_{ar}, is the sum of the dead time and the time constant. In the MATLAB commands in figure 2, T = time constant and L = dead time.

<u>Estimated parameter values</u>:
Graphical approach: K_m = 1.15, t_m = 0.60 sec., d_m = 0.26 sec.
Two-Point Algorithm: K_m = 1.15, t_m = 0.53 sec., d_m = 0.36 sec.
Area Method: K_m = 1.13, t_m = 0.36 sec., d_m = 0.40 sec.

The fourth identification technique uses the Method of Moments algorithm [2] to identify the three parameters for equation 1. A unit impulse is applied to the process (in open loop) and the parameters are determined from the impulse response data. The area under the impulse response curve determines the process gain. This area value is also used to determine the time constant and subsequently the dead time. In the experiment, the width of the pulse applied to the system is set to 2 seconds and the height set to 0.5.

<u>Estimated parameter values</u>:
Method of Moments: K_m = 1.31, t_m = 0.94 sec., d_m = 0.56 sec.

3 Time-Domain - Closed Loop Methods

The next three methods implemented on the process trainer are closed-loop methods. The first closed loop identification technique is based on a paper by Bogere and Ozgen [3] and identifies a second-order-plus-dead-time (SOPDT) model shown in equation 4. The test is carried out in closed-loop under proportional control.

$$G_m(s) = \frac{K_m e^{-d_m s}}{(t_1 s + 1)(t_2 s + 1)} \quad (4)$$

K_m is the process model gain, d_m is the process model dead time and the two time constants are denoted by t_1 and t_2. The proportional gain is set so that the process output has an oscillatory response as shown in figure 3.

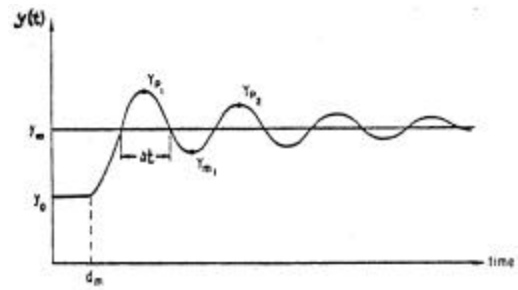

Figure 3. Under-damped transient response, for a step input [3].

The time delay, d_m, is taken directly as the time interval between the time when the set-point input is made to the process and the time when the output from the process begins to respond to the input. A modified three-term Taylor approximation of the exponential delay term in the closed loop characteristic equation is subsequently used. This allows a second order closed loop approximation to be written in terms of K, d_m, t and z. The second order approximation parameters t and z can be expressed in terms of the measurable quantities Δt and Y_0, Y_{p1}, Y_{p2}, Y_{m1} and Y_∞ on the response curve. Hence, the model parameters, K_m, t_1 and t_2 may be estimated as [3]

$$K_m = \frac{|Y_\infty - Y_0|}{K_c\left(A - |Y_\infty - Y_0|\right)} \quad (5)$$

$$t_1 = a + b \quad (6)$$

$$t_2 = a - b \quad (7)$$

where $a = \left(\frac{\Delta t}{p}\right) V\sqrt{1 - V^2}(1 + K) - 0.5aK\, d_m$

and $b = \left(b_1 + b_2 + b_3\right)^{\frac{1}{2}}$ (8)

and A is the magnitude of the change in set-point step input and a, b_1, b_2 and b_3 are defined by Bogere and Ozgen [3].

<u>Estimated parameter values</u>: K_m = 0.86, d_m = 0.25 secs., t_1 = 0.70 secs., t_2 = 0.22 sec.

Alternatively, a method described by Mamat and Fleming [4] is used to identify a first-order-plus-dead-time model in closed-loop under Proportional/Integral (PI) control. The model structure is shown in equation 1. If the PI controller parameters K_C (Proportional gain) and T_I (Integral time) are

chosen such that the closed-loop response is under-damped, as shown in Figure 4, then by using a 1st order Pade approximation for the dead-time term, $e^{-d_m s}$, in the denominator of the closed loop transfer function, the closed-loop response can be approximated by a second order plus dead-time transfer function:

$$G_{CL}(s) = \frac{C(s)}{R(s)} = \frac{K e^{-ds}}{t^2 s^2 + 2zts + 1} \qquad (9)$$

From the closed loop step response data, five characteristic points are used to determine the second order plus dead-time approximation (equation 9) and subsequently, the frequency response of the closed-loop system. Knowing the dynamics of the closed-loop system and the dynamics of the controller, the open-loop dynamics of the process can be determined by separating the dynamics of the controller from the closed-loop dynamics. The equations to determine *K*, *d*, *t* and *z* are as follows, where *A* is the magnitude of the set-point change (as above):

$$K = \frac{C_{ss}}{A};\ r = -\frac{1}{2p}\ln\left[\frac{C_{p2} - C_{ss}}{C_{p1} - C_{ss}}\right];\ V = \sqrt{\frac{r^2}{1 + r^2}};$$

$$t = \frac{(t_{p2} - t_{p1})\sqrt{1 - V^2}}{2p};$$

$$d = \frac{S_c}{C_{ss}} - 2Vt;\ S_c = \int_0^\infty [C_{ss} - C(t)]dt$$

The equations to determine the first-order-plus-dead-time parameters K_m, t_m and d_m are subsequently given [4].

<u>Estimated parameter values:</u> K_m = 1.06, t_m = 0.45 sec., d_m = 0.50 sec.

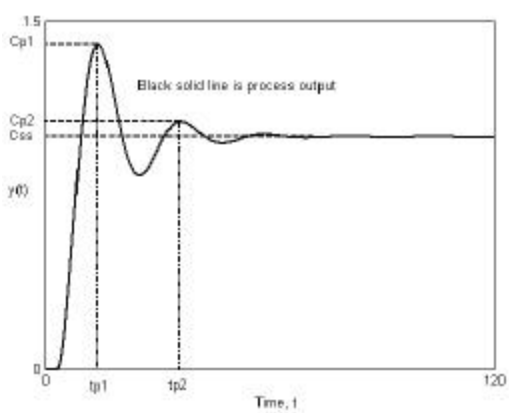

Figure 4. Typical under-damped closed-loop servo step response under PI control.

The third closed loop identification method implemented on the process trainer is that proposed by Suganda, Krishnaswamy and Rangaiah [5] to identify a second-order-plus-dead-time process model, as shown in equation 10. The system is in closed-loop under PI (Proportional/Integral) control. In this method, the same five characteristic points, as shown in figure 4, that are used in the method of Mamat & Fleming [4] are also taken to determine the second-order-plus-dead-time model of the overall closed loop system. The phase crossover frequency and the magnitude at this frequency are then determined; the four parameters for the second-order-plus-dead-time process model are subsequently calculated.

$$G_m(s) = \frac{K_m e^{-d_m s}}{t_m^2 s^2 + 2t_m z_m s + 1} \qquad (10)$$

Estimated parameter values: K_m = 0.99, t_m = 0.26, z_m = 1.07, d_m = 0.28 sec.

4 Frequency-domain

4.1 First-Order-Plus-Dead-Time model

Identification in the frequency domain involves the estimation of the process frequency response over an appropriate frequency range, followed by the estimation of the model parameters. The process frequency response may be measured in open loop by recording the output of the process as a sine wave input varies in frequency. The model parameters are estimated by a two-stage approach, combining an analytical approach and a gradient approach, as detailed by O'Dwyer [6]. The three parameters of the first-order-plus-dead-time (FOPDT) model, equation 1, are analytically calculated as follows:

$$K_m = \frac{|G_p(jw_1)||G_p(jw_2)|\sqrt{w_2^2 - w_1^2}}{\sqrt{|G_p(jw_2)|^2 w_2^2 - |G_p(jw_1)|^2 w_1^2}} \qquad (11)$$

$$t_m = \frac{1}{w}\sqrt{\frac{K_m^2}{|G_p(jw)|^2} - 1} \qquad (12)$$

$$d_m = \frac{1}{w}\left[-f_p(jw) - \tan^{-1}(w t_m)\right] \qquad (13)$$

where w_1 and w_2 are two test frequencies; $|G_p(jw_1)|$ and $|G_p(jw_2)|$ are the magnitudes of the frequency response at w_1 and w_2 respectively; f_p is the phase of the frequency response at test frequency *w*. The gradient approach is subsequently employed to determine the most accurate model parameters. The gradient method uses the plot of the cost function, *J*, to determine the best estimate between process and model by searching for the minimum value. The cost function, *J*, is a plot of the function of the mean sum of the squares of the error between the process and the model of the process. An important requirement is that *J* must be unimodal i.e. *J* must have no local minima. The algorithm determines the partial derivative of the cost function, with respect to the three FOPDT parameters K_m, t_m and d_m, at the initial estimate and subsequent estimates. The final and most accurate estimated value (least squares) is in the trough of the cost function curve.

<u>Estimated parameter values:</u> K_m = 1.13, t_m = 0.61 sec., d_m = 0.34 sec.

4.2 Second-Order-Plus-Dead-Time model

The two-stage approach, combining an analytical and gradient method, is also used to obtain the parameters of a SOPDT model.

Estimated parameter values: K_m = 1.13, d_m = 0.23 sec., t_1 = 0.22 sec, t_2 = 0.35 sec.

5 Relay-based Identification

The final method explored uses a relay in series with the process in closed loop as shown in figure 5, to allow the calculation of model parameter estimates from the estimated ultimate gain ($\hat{K}_u$), and ultimate frequency ($\hat{w}_u$). In the experiment carried out on the process trainer, the estimated ultimate frequency, $\hat{w}_u$, is determined as 4.65 radians/second and the estimated ultimate gain, $\hat{K}_u$, is 4.48. The time delay, *d*, is read off from the initial part of the relay feedback test as 0.4 seconds. The equations to estimate the time constant and gain of the first-order-plus-dead-time (FOPDT) model, using the ultimate gain/ultimate frequency data, are shown in equations 14 and 15 respectively [7]:

$$t = \frac{\tan(p - d\,w_u)}{w_u} \tag{14}$$

$$K_m = \frac{\sqrt{\left(t\,w_u\right)^2 + 1}}{K_u} \tag{15}$$

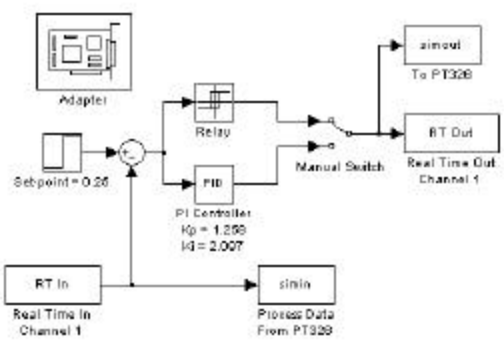

Figure 5. MATLAB/SIMULINK/Humusoft file used for relay-based identification (Manual Switch in Up position) and closed loop methods under P/PI control (Manual Switch in Down position).

Estimated parameter values: K_m = 0.78, t_m = 0.72 sec., d_m = 0.40 sec.

6 Validation

The results of the parameter estimation for each of the identification techniques discussed are validated in the time- and frequency-domains using step response and Nyquist plots. In the time-domain validation procedure, a step is applied to the model and the resulting data plotted on the same plot as the process data to compare the accuracy of the model with the process. The most accurate time-domain open loop and closed loop process identification methods (the two-point method [1] and the method defined by Suganda *et al* [5], respectively) are demonstrated in this paper in figure 6 by comparing the Nyquist plots of model and process data. Figure 7 shows a comparison of the Nyquist plots of the process and the models obtained from the frequency-domain and relay-based methods.

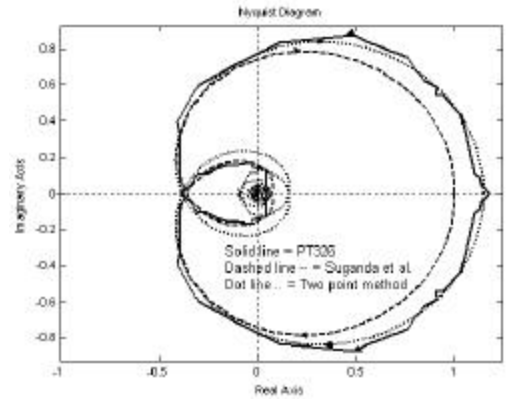

Figure 6. Comparison of Nyquist plots for process data from PT326 and two "best-fit" models from time-domain estimation methods.

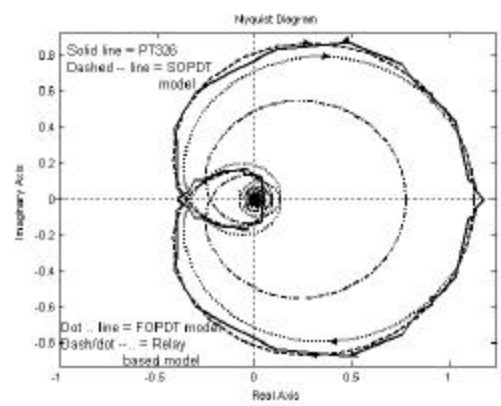

Figure 7. Comparison of Nyquist plots for process data from PT326 and the frequency-domain and relay-based estimation methods.

7 Conclusions

The results of the ten experiments to identify a process model are compared. In the time-domain, it is concluded that the "best-fit" between the model and process is achieved by using the two-point method [1] or the method of Suganda *et al*. [5]. The two-point method identifies a first-order-plus-dead-time model and is a relatively straightforward method carried out in open loop. A disadvantage of open loop identification is that the process has to be taken out of commission while the test is being carried out. The method of Suganda *et al.* [5] is a

closed loop test carried out while the loop is under Proportional/Integral (PI) control. The test identifies a second-order-plus-dead-time process model. Since most feedback loops in practise involve Proportional/Integral (PI) controllers, an added advantage of this method is that the test data for retuning could be obtained during normal operation, for example, while switching from one operating level to another. In the frequency-domain identification techniques, both the first-order-plus-dead-time (FOPDT) and second-order-plus-dead-time (SOPDT) models are accurate representations of the process. However, the second-order-plus-dead-time (SOPDT) model is the "best-fit" of all the models. While estimating the model parameters, it is noticed that the parameters obtained using the analytical method and the gradient method are quite close to each other. This proves that the analytical method works well. The relay based identification techniques are not as accurate as some of the previous methods. The relay used in the experiments is the ideal relay. More accurate results could be obtained by using a biased relay or a relay with hysteresis. The information obtained from the relay-based experiments is very useful in the auto-tuning of controllers.

References

[1] Shaw, J. A. (1993). Analysis of traditional PID tuning methods, *Proceedings of the ISA/93 Advances in Instrumentation and Control Conference*, 48, 391-397, McCormick Place, Chicago, Illinois, USA.

[2] Astrom, K., and Hagglund, T.: "PID Controllers: Theory, Design and Tuning", 2nd Edition, 1995.

[3] Bogere, M. N., and Ozgen, C. 1989. "On-line controller tuning of second order dead time processes". Chem Eng Res Des, Volume 67, November 1989, pp 555-561.

[4] Mamat, R., and Fleming, P.J.: "Method for on-line identification of a first order plus dead-time process model", Electronic Letters, 20th July 1995, Vol. 31, No.15, pp. 1297 – 1298.

[5] Suganda, P., Krishnaswamy, P.R. and Rangaiah, G.P. "On-line Process Identification from Closed Loop Tests under PI Control". TransIChemE. Volume 76, Part A, May 1998: 451-457.

[6] O'Dwyer, A. 2002. "A Frequency Domain Technique for the Estimation of the Parameters of a Delayed Process", Transactions of the Institute of Measurement and Control, Vol. 24, No. 4, pp. 277 - 288.

[7] Cheng-Ching Yu, "Autotuning of PID Controllers". Springer-Verlag London Limited 1999.