Dublin Institute of Technology
ARROW@DIT

Conference papers

School of Electrical and Electronic Engineering

2007-01-01

Some Techniques to Improve Small Groundplane Printed Monopole Performance

Max Ammann
Dublin Institute of Technology, max.ammann@dit.ie

Matthias John
Dublin Institute of Technology, matthias.john@dit.ie

Follow this and additional works at: http://arrow.dit.ie/engschececon

Part of the Electrical and Computer Engineering Commons

Recommended Citation

Ammann, M., John, M.: Some techniques to improve small groundplane printed monopole performance. IEEE Antennas and Propagation International Symposium, pp.2825-2828. Honolulu, 9-15 June, 2007.

This Conference Paper is brought to you for free and open access by the School of Electrical and Electronic Engineering at ARROW@DIT. It has been accepted for inclusion in Conference papers by an authorized administrator of ARROW@DIT. For more information, please contact yvonne.desmond@dit.ie, arrow.admin@dit.ie.

This work is licensed under a Creative Commons Attribution-Noncommercial-Share Alike 3.0 License

SOME TECHNIQUES TO IMPROVE SMALL GROUNDPLANE PRINTED MONOPOLE PERFORMANCE

M. J. Ammann and M. John
Centre for Telecommunications Value-chain Research
School of Electronic & Communications Engineering
Dublin Institute of Technology,
Kevin St., Dublin 8, Ireland.

INTRODUCTION

Printed planar monopole antennas are enjoying considerable popularity and publicity to their low-profile, wide bandwidth, quasi-omnidirectional radiation characteristics and their ease of integratability into devices [1-2]. It is known that classical monopole-type antenna performance is heavily dependent on groundplane effects [3-5]. Printed monopole antennas show similar dependence, but the groundplane lies in the same plane as the radiator. The impedance bandwidth and radiation properties of a strip monopole have been shown to be heavily dependent on groundplane size [5]. The groundplane (GP) is of primary importance and when miniaturised, the antenna properties change significantly. Techniques to improve the performance of printed antennas on small groundplanes are presented.

GROUNDPLANE DEPENDENT EFFECTS

A proliferation of wideband printed antenna designs employing radiator shapes including, circular disc, elliptical, polygonal and rectangular geometries have recently been reported, mainly driven by both the recent allocation of a broad spectrum for UWB applications and the increased demand for small terminal antennas, suitable for integration into portable devices. The antenna performance is heavily dependent on groundplane size. A relatively small change in GP size of about 40% can change the impedance bandwidth by a factor of 6 [5]. It has also been shown that small groundplanes can place severe restrictions on both the lower frequency of operation and the bandwidth. For illustration, a simple printed strip monopole is presented. The monopole is printed on one side of an FR4 substrate and the groundplane is located on the opposite side. The antenna is fed by a 50Ω microstrip line, of width w=2.4 mm. This line extends above the groundplane by a length l=30 mm (0.2 λ_0 at 2 GHz). The square groundplane has dimensions 35x35 mm. The antenna is shown in Figure 1. The laminate properties are; 1 oz/sq. ft. EDC, tan δ=0.02, ε_r=4.3, t=1.6 mm. The measured bandwidth is 390 MHz and the antenna covers a frequency range from 1.64 GHz to 2.03 GHz for 10 dB RL. This compares to bandwidths of 1050 MHz and 190 MHz for GP sizes of 50 and 80 mm square respectively.

1-4244-0878-4/07/$20.00 ©2007 IEEE

Authorized licensed use limited to: DUBLIN INSTITUTE OF TECHNOLOGY. Downloaded on April 24, 2009 at 10:12 from IEEE Xplore. Restrictions apply.

TECHNIQUES TO ALLEVIATE GROUNDPLANE DEPENDENCY

GROUNDPLANE AUGMENTATION

A simple technique to extend the groundplane and hence alter GP modes is to add strips along the groundplane side of the PCB edge. For extension strips 0.5 mm wide and 10 mm long, the lower edge frequency remains the same (1.66 GHz) but the bandwidth increases from 390 MHz to 890 MHz, without any increase in laminate size. This technique can also be used to reduce the bandwidth as seen in Figure 2. This figure illustrates the bandwidth dependence on strip length. The lower edge frequency is relatively stable at 1.66 GHz. Radiation pattern distortion is not significant.

Another method is to run the GP around the monopole as shown in Figure 1b. This type of groundplane window/slot style antenna can be used to significantly reduce the lower edge frequency. Bringing the ground around the monopole at h_s= 40 mm with a 0.5 mm strip gives a lower edge frequency of 1.32 GHz and bandwidth of 380 MHz. This windowing technique [6] can serve as a useful method of miniaturisation. Radiation pattern distortion is minimal due this effect. Significantly wider bandwidths can be found by optimising the slot feed structure. Groundplane shaping is also useful for extending bandwidth and reducing pattern distortion at higher frequencies [7]. This is in contrast to radiator shaping, which has been successfully done using genetic algorithms [8].

ASYMMETRY

Where the groundplane is restricted in size, the use of asymmetry [9] can be used to significantly improve the impedance bandwidth, but at the expense of introducing some pattern distortion. In many cases, the pattern distortion is acceptable [10]. For this, a printed rectangular monopole as shown in Figure 3 is chosen to illustrate the effect. The monopole plate is rectangular, with the dimensions w_p=20 mm and h_p=30 mm, which is fed by a microstrip feedline of width w_f=2.5 mm via an SMA microstrip-launch connector. The optimum feedgap (optimised by classic powell [11]), between the plate and the groundplane is h_{gap}=2 mm. This antenna exhibits a maximum measured 10 dB RL bandwidth of 5.35 GHz (1.57 GHz to 6.91 GHz) when the GP is 50 mm square. When the GP is smaller, this value is reduced. For a 30x30 mm GP, this value drops to 1.56 GHz. This can be significantly improved by using asymmetry in the feedline. A 4 mm offset yields a bandwidth of 3.87 GHz, an improvement of 258%. This is shown in Figure 4.

CONCLUSIONS

It is shown that limitations imposed on printed monopole antennas by small groundplanes can be mitigated using various techniques.

Authorized licensed use limited to: DUBLIN INSTITUTE OF TECHNOLOGY. Downloaded on April 24, 2009 at 10:12 from IEEE Xplore. Restrictions apply.

REFERENCES

1. Z.N. Chen, M.J. Ammann, X. Qing, X.H. Wu, T.S.P. See and A. Cai, "Planar antennas: Promising solutions for microwave UWB applications," *IEEE Microwave Magazine*, 2006, vol. 7(6), pp. 63-73.
2. J. Liang, C Chiau, X. Chen and C.G. Parini, "Printed circular disc monopole antenna for ultra wideband applications," *Electronic Letters*, 40, (20), pp.1246-1248, 2004.
3. A.T. Arkko, "Effect of Ground Plane Size on the Free-Space Performance of a Mobile Handset PIFA Antenna," *IEE Intl. Conf. Antennas & Propagat. (ICAP),* (1), 316-319, 2003.
4. E. Antonino-Daviu, C.A. Suarez-Fajardo, M. Cabedo-Fabrés, M. Ferrando-Bataller, "Wideband Antenna for Mobile Terminals based on the Handset PCB Resonance," *Microwave Opt. Technol. Lett*, 48, (7), 1408-1409, 2006.
5. M. J. Ammann and M. John, "Optimum Design of the Printed Strip Monopole," *IEEE Antennas & Propagat. Mag,*. 47, (6), 59-61, 2005.
6. C. J. Wang and D. F. Hse, "Studies of the Microstrip Monopole Antenna with Windowed Groundplane," *Microwave Opt. Technol. Lett*. 42, (5), 407-411, 2004.
7. M. J. Ammann and Z. N. Chen, "An Asymmetrical Feed Arrangement for Improved Impedance Bandwidth of Planar Monopole Antennas," *Microwave Opt. Technol. Lett*., 40, (2), 156-158, 2004.
8. M. John and M. J. Ammann, "Wideband Printed Monopole Design Using a Genetic Algorithm," *IEEE Antennas & Wireless Propagat. Letters*. 2007, (6),
9. S. Curto, M. John and M. J. Ammann, "Groundplane Dependent Performance of Printed Antenna for MB-OFDM-UWB," *65th IEEE Vehicular Technology. Conf*, Dublin, 2007
10. C. Zhang and A. E. Fathy, "Development of an ultra-wideband elliptical disc planar monopole antenna with improved omni-directional performance using a modified ground," *IEEE Intl. Antennas & Propagat Symp. Dig,* 1689-1692, 2006,
11. M. John and M. J. Ammann, "Optimisation of Impedance Bandwidth for the Printed Rectangular Monopole Antenna," *Microwave and Optical Technology Letters*, 2005, 47, (2) 153-154.

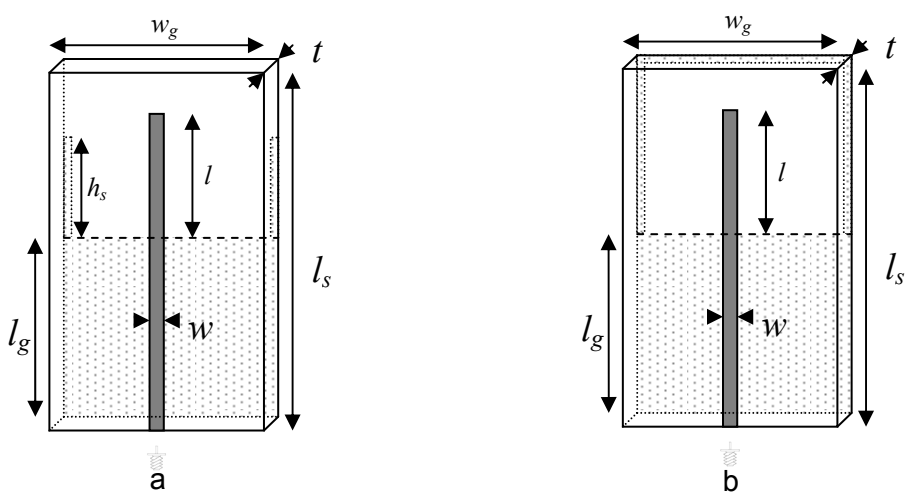

Figure 1. Geometry of the groundplane extension and windowed GP.

Authorized licensed use limited to: DUBLIN INSTITUTE OF TECHNOLOGY. Downloaded on April 24, 2009 at 10:12 from IEEE Xplore. Restrictions apply.

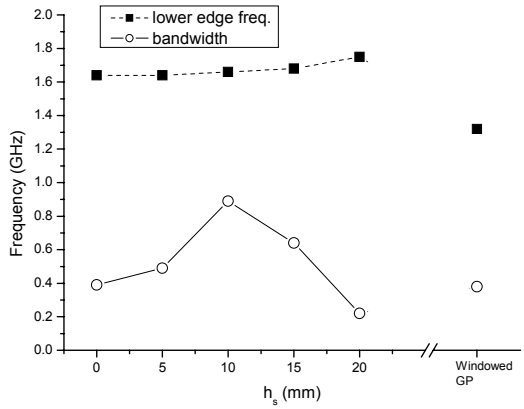

Figure 2. Bandwidth dependence on groundplane strip extension and windowed GP effect on lower edge frequency.

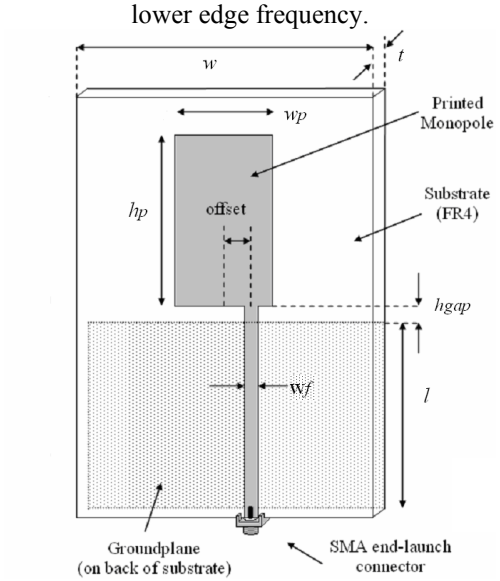

Figure 3. Geometry for the rectangular printed monopole, showing asymmetrical feed line.

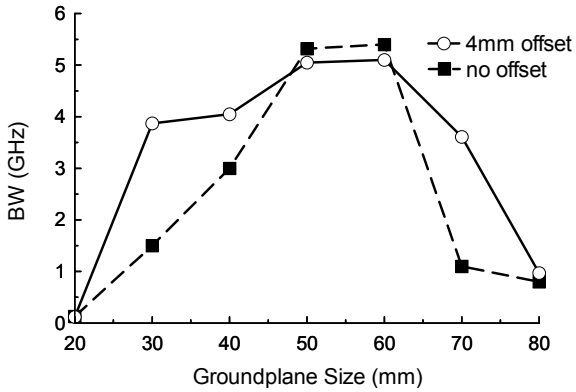

Figure 4. Measured impedance bandwidth for rectangular printed monopole against groundplane size.

Authorized licensed use limited to: DUBLIN INSTITUTE OF TECHNOLOGY. Downloaded on April 24, 2009 at 10:12 from IEEE Xplore. Restrictions apply.