Dublin Institute of Technology
ARROW@DIT

Conference papers

School of Electrical and Electronic Engineering

2007-01-01

Miniaturized Annular Ring Loaded Patch Antennas

Max Ammann
Dublin Institute of Technology, max.ammann@dit.ie

Xiulong Bao
Dublin Institute of Technology, xiulong.bao@dit.ie

Follow this and additional works at: http://arrow.dit.ie/engschececon

Part of the Electrical and Computer Engineering Commons

Recommended Citation

Ammann, M. & Bao, X. (2007) Miniaturized annular ring loaded patch antennas. *IEEE Antennas and Propagation International Symposium>/i>, 9-15 June, Honolulu, 2007.*

This Conference Paper is brought to you for free and open access by the School of Electrical and Electronic Engineering at ARROW@DIT. It has been accepted for inclusion in Conference papers by an authorized administrator of ARROW@DIT. For more information, please contact yvonne.desmond@dit.ie, arrow.admin@dit.ie.

Creative Commons License

This work is licensed under a Creative Commons Attribution-Noncommercial-Share Alike 3.0 License

MINIATURIZED ANNULAR RING LOADED PATCH ANTENNAS

M. J. Ammann and X. L. Bao
Centre for Telecommunications Value-chain Research,
School of Electronic & Communications Engineering,
Dublin Institute of Technology, Kevin Street, Dublin 8, Ireland

INTRODUCTION

The proliferation of wireless communication systems has promoted the development of miniaturized antenna designs. Annular ring patch antennas [1-2] are reported to reduce antenna size. In this paper, several novel compact probe-fed annular-ring microstrip patch antennas are presented. In order to reduce the antenna size and provide a suitable input impedance match, two techniques are employed; the insertion of strips into the annular ring and placing a cross-slot into the ground plane. The proposed annular-ring patch antennas with a cross-slotted ground plane yield a much smaller size for a given frequency and are easily matched to 50 Ohms. These novel patch antennas can effectively be reduced by about 55 percent in size compared to conventional annular-ring patch antennas [3]. The antenna can be designed for single band circular-polarization, dual-band circular polarization, triple band [4], or wideband operation [5], depending on parameter selection. Some significant advantages are evident for these structures, such as the centre-frequency exhibiting weak dependence on the position of the feedpoint as well as compact size. Good circularly polarized properties and wide CP bandwidths are obtained for these compact antennas. The multiband versions can provide small frequency ratios. The optimized dimensions for four different type antennas are displayed in the table 1.

SINGLE AND DUAL BAND CP ANTENNAS

Figure 1 shows the geometry of a single band compact circularly polarized antenna. A circular patch of radius *R3* is centered in the narrow annular-ring, of outer radius *R1* and inner radius *R2*. These patches are printed on FR4 substrate, of relative permittivity 4.2, a thickness of 1.52mm, and a loss tangent of 0.018.. The crossed slot in the groundplane has unequal lateral lengths, *L1* and *L2*, with a slot width w. This structure excites two degenerate orthogonal modes with equal amplitude and 90 degree phase difference by tuning various parameters (*R2*, *R3*, *L1*, and *L2*) and right-hand circular polarization (RHCP) radiation is obtained.

Dual band operation is achieved by employing an extra annular-ring, in addition to the first one which surrounds the small circular patch as shown in Figure 2a. The circularly-polarized frequency ratio of the two resonant modes is tunable to a small value, suitable for wireless communications systems. The resonant frequency of the lower mode is mainly determined by the larger outer ring

1-4244-0878-4/07/$20.00 ©2007 IEEE

Authorized licensed use limited to: DUBLIN INSTITUTE OF TECHNOLOGY. Downloaded on April 24, 2009 at 10:12 from IEEE Xplore. Restrictions apply.

radius while the resonant frequency of the higher mode is dependent on both the inner ring radius and the separation between the inner annular-ring and the inner circular patch. The feedpoint is located on the 45 degree diagonal and by adjusting the lengths of the cross-slot arms, the upper and lower resonances can be split into two orthogonal modes with nearly equal amplitude and 90 degree phase difference. Hence, a dual-frequency circularly-polarized antenna is achieved. If the lateral slot length $L1>L2$, then right-hand circular polarization is produced. For the lateral slot length $L1<L2$, then left-hand circularly polarization is provided, for the same feedpoint location.

TRIPLE BAND ANTENNA

To provide triple band operation, the addition of stubs on the inner circular patch is used. This is shown in Figure 2b. The crossed slot in the groundplane remains, in order for miniaturisation. The stub loading can also broaden the lower band by adding them to the outer ring. This structure can excite three resonant frequencies by using the outer annular-ring, inner annular-ring, and the circular patch, which decreases the Q-factor and increases surface current path lengths, hence a compact broadband triple-frequency antenna is realised. A very small frequency ratio of the order of 1.25 is realizable.

WIDEBAND VERSION.

A novel structure which provides both broadband characteristics and miniaturization is proposed. The antenna configuration is shown in Fig.3. An additional annular ring slot is removed from the groundplane. The very wide bandwidth is achieved because of the various resonant modes which are generated by the circular patch, the concentric annular-ring patch, the annular-slot and the slotted groundplane. The frequencies for the multiple resonant modes are merged by adjusting the parameters of the antenna. The S11 for all types are shown in Figure 4 and dimensions in Table 1. A 53% impedance bandwidth is observed for this configuration.

CONCLUSIONS

Several novel miniature annular-ring embedded circular patch antennas are described. They employ a cross-slot in the ground plane for miniaturisation. The antennas can be designed to provide circular polarization or linear polarization and are significantly smaller than the conventional annular-ring patch antennas. They can also be designed for multiband or wideband operation. The relatively wide bandwidths and centre-frequency are not heavily dependent on feedpoint position and the antennas provide a convenient match to 50 Ohm, are easy to fabricate and demonstrate wide manufacturing tolerances.

Authorized licensed use limited to: DUBLIN INSTITUTE OF TECHNOLOGY. Downloaded on April 24, 2009 at 10:12 from IEEE Xplore. Restrictions apply.

REFERENCES

[1]. A.K.Bhattacharyya, L.Shafai, A Wider Band Microstrip Antenna for Circular Polarization, *IEEE Transactions on Antennas and Propagtion*, Vol.36, No.2, February 1988, pp.157-163.

[2]. David.M.Kokotoff, J.T.Aberle, R.B.Waterhouse, Rigorous Analysis of Probe-Fed Printed Annular Ring Antennas, *IEEE Transactions on Antennas and Propagation*, Vol.47, No.2, February 1999, pp.384-388.

[3]. X. L. Bao and M. J. Ammann, Compact Annular-ring Embedded Circular Patch Antenna with a Cross-slot Ground Plane for Circular Polarization, *Electronics Letters,* 2006, 42, (4), 192-193.

[4]. X. L. Bao and M. J. Ammann, Compact Concentric Annular-ring Patch Antenna for Triple-frequency Operation, *Electronics Letters,* 2006, 42, (20), 1129-1130.

[5]. X. L. Bao and M. J. Ammann, Small Patch/Slot Antenna with 53% Input Impedance Bandwidth, *Electronics Letters,* 2007, 43,

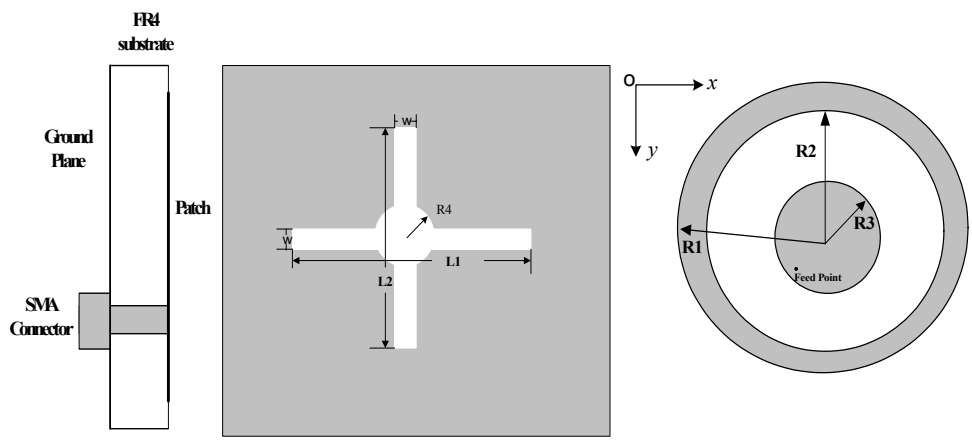

(a) (b) (c)

Figure 1 The geometry of the single-band circularly polarized antenna

Table 1 The optimized parameters for the four type antennas

Antenna Types	parameters
Single-band CP	*R1*=24.8mm ,*R2*=22mm, *R3*=9.0mm, *L1*=48mm, *L2*=50mm, *w*=2mm, *R4*=4mm , feedpoint=(-5mm,5mm), goundplane=100mm×100mm
Dual-band CP	*R1*=24mm, *R2*=18.9mm, *R3*=6.5mm, *W1*=0.8, *W2*=7.5mm, *L1*=40mm, *L2*=42.4mm, feedpoint=(-3mm,-3mm), groundplane=80mm×80mm
Tri-band	*R1*=22.4mm, *R2*=16.5mm, *R3*=6.9, *w1*=0.8mm,*w2*=5.0mm, *L1*=39mm, *L2*=41.5mm, *M1*=2.5mm, *M2*=3.0mm, *M3*=3.0mm,*M4*=6.8mm, *N*=0.4mm, feedpoint=(-3mm,-3mm), grounplane =60mm× 60mm
Broadband	*D1*=54mm, *D2*=39.2mm, *D3*=25mm, *SD1*=54mm, *SD2*=48mm, *SD3*=9mm, *L1=L2*=44.0mm, *w*=2.0mm, feedpoint=(4mm,4mm), gorundplane=80mm× 80mm

Authorized licensed use limited to: DUBLIN INSTITUTE OF TECHNOLOGY. Downloaded on April 24, 2009 at 10:12 from IEEE Xplore. Restrictions apply.

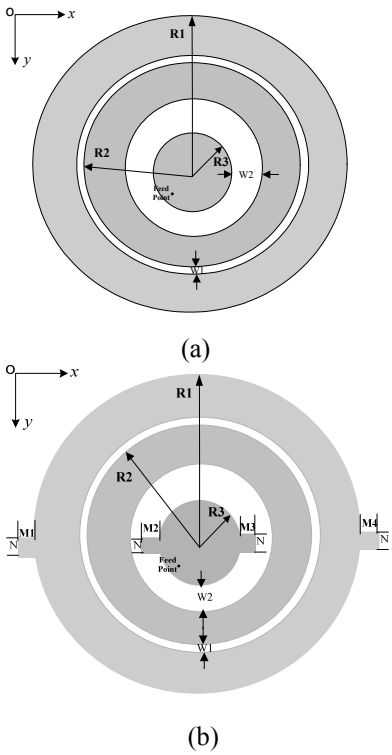

Figure 2 The patch of dual-band CP antenna (a) and patch of triband antenna (b)

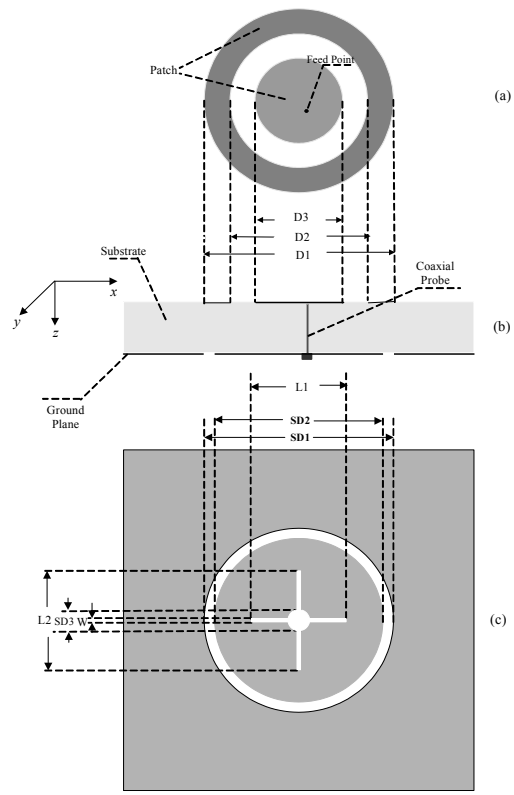

Figure 3 The geometry of the wideband antenna

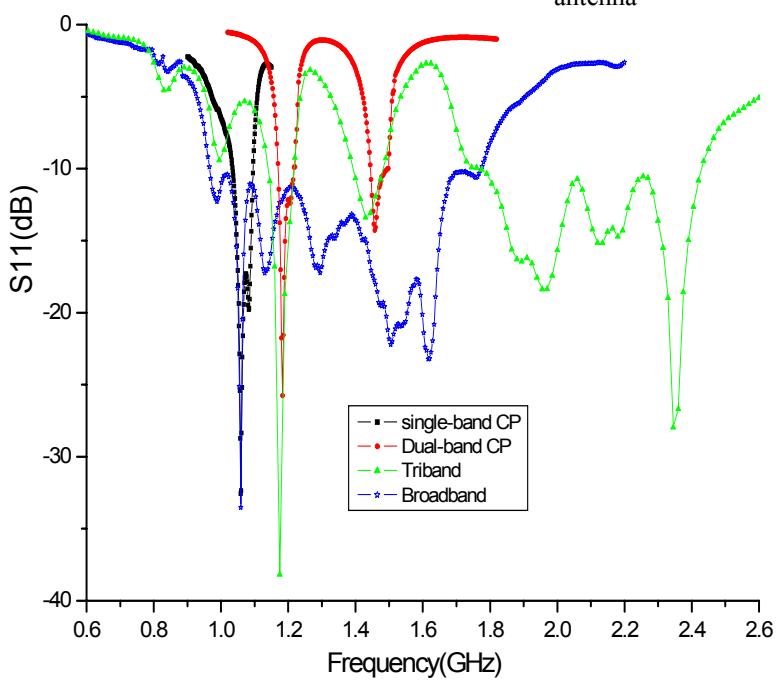

Figure 4 The comparison of the measured *S11* for four type antennas

Authorized licensed use limited to: DUBLIN INSTITUTE OF TECHNOLOGY. Downloaded on April 24, 2009 at 10:12 from IEEE Xplore. Restrictions apply.