Dublin Institute of Technology
ARROW@DIT

Conference papers

School of Electrical and Electronic Engineering

1996-01-01

The control of a process with time delay by using a modified Smith predictor compensator

Aidan O'Dwyer
Dublin Institute of Technology, aidan.odwyer@dit.ie

John Ringwood
Dublin City University

Follow this and additional works at: http://arrow.dit.ie/engscheleart

Part of the Controls and Control Theory Commons

Recommended Citation

O'Dwyer, Aidan and Ringwood, John : The control of a process with time delay by using a modified Smith predictor compensator. Proceedings of the Irish Conference on DSP and Control, pp. 37-44, Trinity College Dublin, June, 1996.

This Conference Paper is brought to you for free and open access by the School of Electrical and Electronic Engineering at ARROW@DIT. It has been accepted for inclusion in Conference papers by an authorized administrator of ARROW@DIT. For more information, please contact yvonne.desmond@dit.ie, arrow.admin@dit.ie.

This work is licensed under a Creative Commons Attribution-Noncommercial-Share Alike 3.0 License

Proceedings of the *Irish Digital Signal Processing and Control Conference*, Trinity College, Dublin, Ireland, June 1996, p. 37-44

The control of a process with time delay by using a modified Smith predictor compensator

A. O'Dwyer* and J.V. Ringwood**

* Department of Control Systems and Electrical Engineering,
Dublin Institute of Technology,
Kevin St., Dublin 8.

** School of Electronic Engineering,
Dublin City University,
Glasnevin, Dublin 9.

Abstract

A modification is proposed to the Smith predictor compensator structure for the control of a process with time delay. The modification facilitates the achievement of an improved closed loop system regulator response, with little degradation in the corresponding servo response. The compensator design procedure is discussed, and simulation results are provided to demonstrate the applicability of the method.

Keywords: time delay systems, compensation

1. Introduction

The design of controllers for processes with long time delays has been of interest to academics and practitioners for several decades. In a seminal contribution, Smith [1] proposed a technique that facilitates the removal of the time delay term in the closed loop characteristic equation. This method, labelled the Smith predictor, has been the subject of numerous experimental and theoretical studies. A block diagram of the Smith predictor structure is provided in Figure 1.

Figure 1: Block diagram of the Smith predictor structure

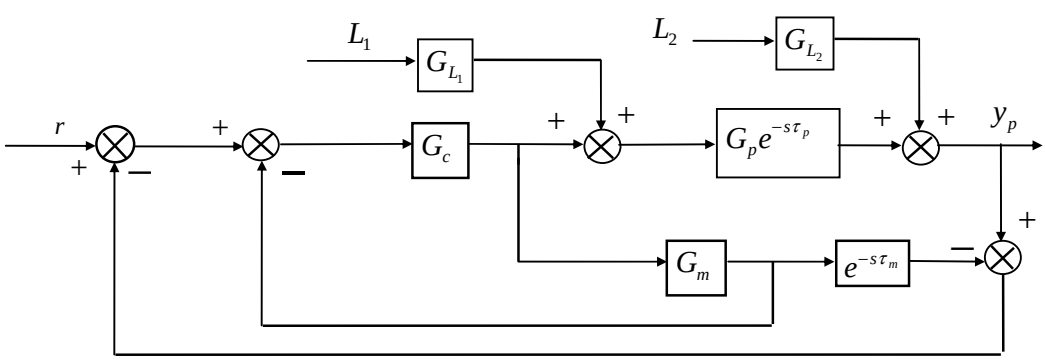

The response of the compensated system is as follows:

$$\frac{y_p}{r} = \frac{(G_p G_c e^{-s\tau_p})r + (G_{L_1} G_p e^{-s\tau_p} L_1 + G_{L_2} L_2)(1 + G_m G_c\left[1 - e^{-s\tau_m}\right])}{1 + G_c G_m + G_c\left(G_p e^{-s\tau_p} - G_m e^{-s\tau_m}\right)} \tag{1}$$

2. Smith predictor structure modifications

A number of authors have proposed modifications to the Smith predictor structure to improve the regulator response of the compensated system and/or to reduce the effect on either the servo or the regulator response of process-model mismatch. Some authors (e.g. Marshall [2], Kantor and Andres [3], Watanabe and Ito [4], Watanabe *et al*. [5], Hocken *et al*. [6], Romagnoli *et al.* [7], Astrom *et al*. [8] and Datsych [9]) suggest that improved responses may be obtained if appropriate dynamic terms are included in either the outer feedback loop or the inner feedback loop. Other authors suggest either the feedback of extra dynamic elements from either the process or model outputs (Benouarts and Atherton [10]), the inclusion of a dynamic element in the forward path of the compensator (Huang *et al*. [11]) or the feedforward of a disturbance signal acting on the process through an appropriate dynamic element (Palmor and Powers [12]). Many of the modifications of the Smith predictor structure discussed are subsets of the implementation provided in Figure 2 below.

Figure 2: Block diagram of a generalised Smith predictor structure

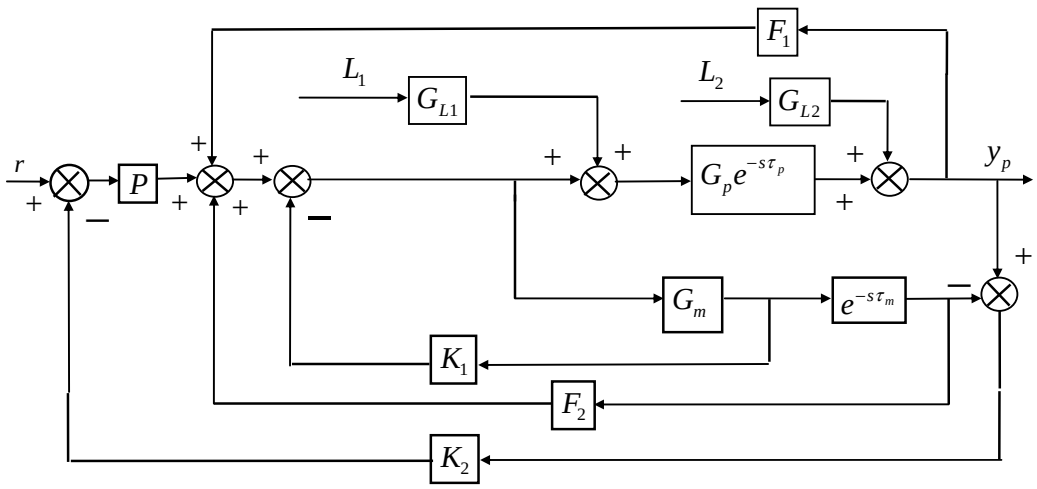

The response of the above system may be derived to be

$$y_p = \frac{\left(G_p P e^{-s\tau_p}\right) r + \left(1 + G_m\left[K_1 + \{F_2 - K_2 P\} e^{-s\tau_m}\right]\right)\left(G_{L2} L_2 + G_p G_{L1} e^{-s\tau_p} L_1\right)}{1 + \left(G_m K_1 + G_m\left[F_2 - K_2 P\right] e^{-s\tau_m} - G_p\left[F_1 - K_2 P\right] e^{-s\tau_p}\right)} \tag{2}$$

One may optimise the servo and regulator responses, and minimise the effect of the mismatch between the process and the model, by appropriate design of three of the five dynamic elements in Figure 2. It may be shown that five separate modifications to the Smith predictor structure may be defined theoretically such that ideal servo and regulator action is achieved, with elimination of process-model mismatch, under the assumption that the unknown process parameters are represented by appropriate known model parameters. Unfortunately, all of the implementations require the inversion of the model transfer function and/or the time delay to set up one of the required dynamic elements. Such non-proper transfer functions would need to be approximated, which provokes instability in the resulting compensated system.

It was decided to design a modified Smith predictor to achieve a servo response similar to that obtained from an open-loop first order lag plus delay (FOLPD) model, with a corresponding regulator response. Such responses may also be achieved by using the Internal Model Control (IMC) strategy described by Morari and Zafiriou [13]. Six separate modifications to the Smith predictor strategy may be defined that will facilitate the desired servo and regulator action, with process-model mismatch elimination, provided the process

parameters are known. More realistically, the process parameters are normally unknown; if the process is represented by a known model, then four such modifications to the Smith predictor strategy are defined in Table 1. Such modifications will not facilitate the complete elimination of process-model mismatch.

Table 1: The implementation of realistic servo and regulator action, with the unknown process parameters modelled by known model parameters.

Implementation	P	F_1	F_2	K_1	K_2
Mod 1	1	0	0	a	$e^{s\tau_m}$
Mod 2	b	0	0	1	$e^{s\tau_m}$
Mod 3	1	$-e^{s\tau_m}$	$-e^{s\tau_m}$	a	1
Mod 4	b	c	c	1	1

with $a = (1 + G_m G_c - G_c)/G_m G_c$, $b = G_c(1 + G_m)/1 + G_c G_m$ and $c = b\left(1 - e^{s\tau_m}\right)$.

If G_m is a first order lag element and G_c is a PI controller, then the best modification to choose is Mod 2, as the only non-proper dynamic element in this implementation is the time advance term. The block diagram of this modified Smith predictor is shown in Figure 3, assuming a disturbance input on L_1 only.

Figure 3: Block diagram of the modified Smith predictor structure chosen

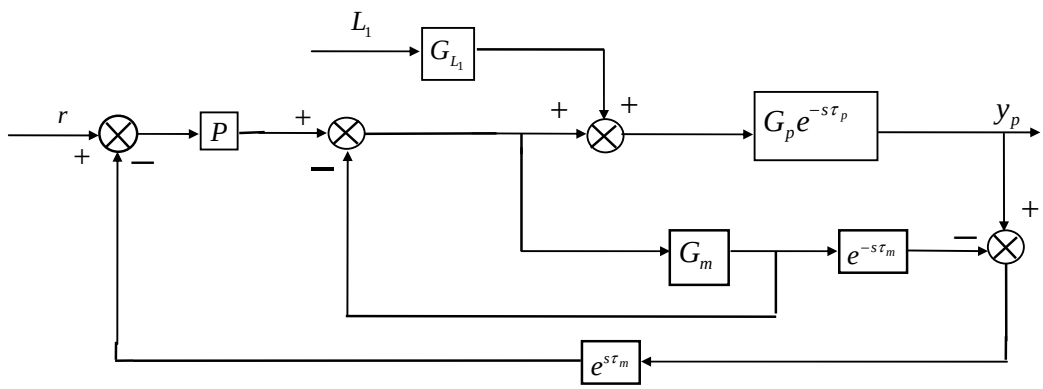

This structure has interesting similarities with the structures defined by Hocken *et al.* [6] (who approximate the extra dynamic element by a time delay equal to the difference between the process and model time delays) and Romagnoli *et al.* [7] (who use a lag controller dynamic element). However, a better approximation of the time advance is provided by Huang *et al*. [11], as follows:

$$e^{\tau_m s} \approx \frac{1 + B(s)}{1 + B(s)e^{-s\tau_m}}, \quad B(s) = \frac{k}{1 + Ts} \tag{3}$$

The time advance approximation may be improved by defining $B(s)$ as a phase lead network i.e. $B(s) = (as + 1)/(as + p)$, $p > 1$. The servo and regulator responses, using the approximation, are as indicated below.

$$\frac{y_p}{r} = \frac{G_p G_c e^{-s\tau_p}}{1 + G_c G_m + G_c \left[\frac{1 + B(s)}{1 + B(s) e^{-s\tau_m}} \right] \left(G_p e^{-s\tau_p} - G_m e^{-s\tau_m} \right)} \tag{4}$$

$$\frac{y_p}{L_1} = \frac{G_p e^{-s\tau_p} G_{L1} \left[1 + G_m G_c \left(1 - e^{-s\tau_m} \right) + B(s) e^{-s\tau_m} \right]}{\left(1 + G_c G_m \right) \left(1 + B(s) e^{-s\tau_m} \right) + G_c \left(1 + B(s) \right) \left(G_p e^{-s\tau_p} - G_m e^{-s\tau_m} \right)} \tag{5}$$

3. Design of the time advance approximation

The use of the defined time advance approximation implies that

$$G_{OL}^{SERVO} = \frac{G_p G_c e^{-s\tau_p}}{\left(1 + G_c G_m \right) + G_c \left[\frac{1 + B(s)}{1 + B(s) e^{-s\tau_m}} \right] \left(G_p e^{-s\tau_p} - G_m e^{-s\tau_m} \right) - G_p G_c e^{-s\tau_p}} \tag{6}$$

$$G_{OL}^{REGULATOR} = \frac{G_p e^{-s\tau_p} \left[1 + G_c G_m \left(1 - e^{-s\tau_m} \right) + B(s) e^{-s\tau_m} \right]}{\left(1 + G_c G_m \right) \left(1 + B(s) e^{-s\tau_m} \right) + G_c \left(1 + B(s) \right) \left(G_p e^{-s\tau_p} - G_m e^{-s\tau_m} \right) - G_p e^{-s\tau_p} X1} \tag{7}$$

with

$$X1 = 1 + G_c G_m \left(1 - e^{-s\tau_m} \right) + B(s) e^{-s\tau_m} \tag{8}$$

and with G_{OL}^{SERVO}, $G_{OL}^{REGULATOR}$ being the open loop transfer functions in servo and regulator mode, respectively. Unfortunately, a systematic approach for the design of the time advance approximation is difficult to directly deduce from these equations. After the completion of some simulation work, the following iterative design procedure for $B(s)$ was found to be appropriate.

1. The value of a is chosen equal to the time constant of a FOLPD model of the plant.
2. The value of p is chosen iteratively to (a) ensure servo and regulator system stability over the full range of variation of the process parameters anticipated and (b) facilitate a better regulator response (and a similar servo response) than may be achieved with the Smith predictor.

4. Simulation results

A number of simulation results, carried out in SIMULINK, showing the operation of the method are provided below. The process and model parameter values are allowed to vary between upper and lower limits. In addition to the simulation results presented, other results have been obtained for the compensation of higher order processes modelled by a second order system plus delay (SOSPD) model, and with a PID primary controller, and the compensation of higher order processes modelled by a SOSPD model, and with a PI primary controller. All of the simulation results taken show that the modified Smith predictor facilitates better regulator responses, with similar servo responses, compared to the Smith predictor, if the desired servo response is relatively slow. In comparisons of the approach with the robust Smith predictor design, using the IMC design procedure (described by Morari and Zafiriou [13]), the IMC procedure facilitates a more aggressive servo and regulator response. If this requirement is present, then it is desirable that the model should be a good fit for the process in some cases, if the modified Smith predictor is to retain its advantage over the robust IMC based Smith predictor. However, other simulation results do indicate that a better model for the time advance term than the one described may indicate the use of the modified Smith predictor approach, even when the desired servo response is faster.

<u>Case 1</u>: $G_m e^{-s\tau_m} = 2e^{-1.4s}/(1+0.7s)$. $B(s) = (0.7s+1)/(0.7s+10)$. G_c is specified assuming a servo time constant of 1.0s, when the process and model parameters coincide i.e. $G_c = 0.35(1+1/0.7s)$. (- = Smith predictor response, -- = Modified Smith predictor response).

Servo response | Regulator response

(a) $G_p = 1.6/(1+0.5s)$

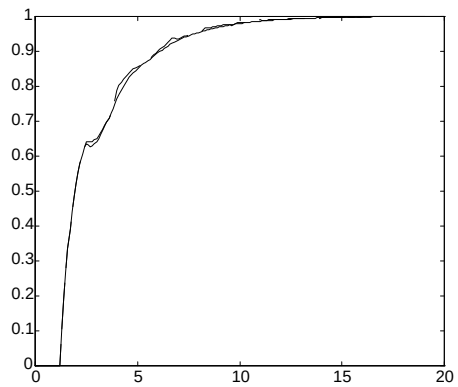

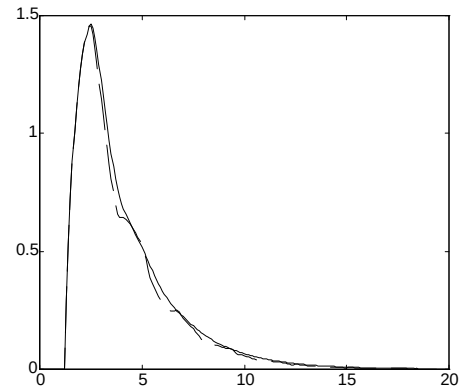

(b) $G_p = 2/(1+0.7s)$

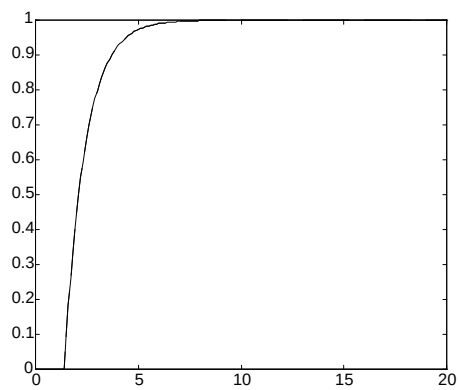

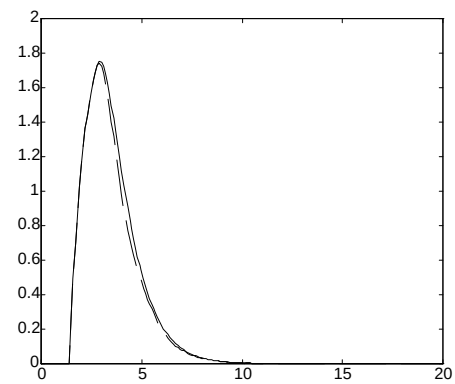

(c) $G_p = 2.4/(1+0.9s)$

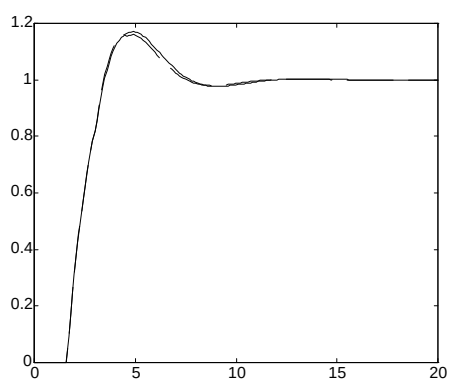

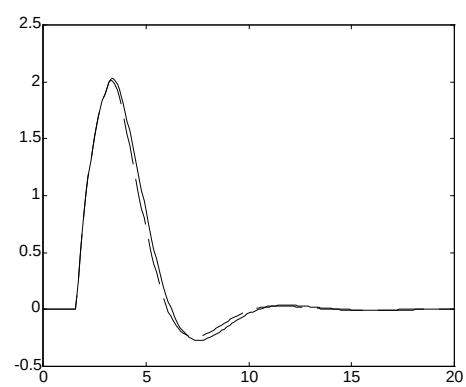

Case 2: $G_m e^{-s\tau_m}$ is specified using the identification method described by O' Dwyer and Ringwood [14] i.e. $G_m e^{-s\tau_m} = 1.82e^{-3.47s}/(1+7.68s)$. $B(s) = (7.68s+1)/(7.68s+20)$. G_c is specified assuming a servo time constant of 2.0s, when the process and model parameters coincide i.e. $G_c = 2.11(1+1/7.68s)$.

Servo response Regulator response

(a) $G_p e^{-s\tau_p} = 1.2e^{-0.7s}/1+5.9s+15.7s^2+12.6s^3$

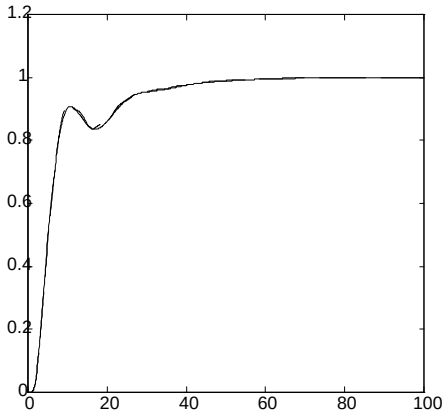

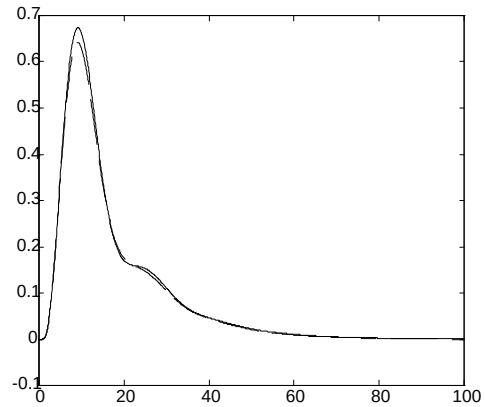

(b) $G_p e^{-s\tau_p} = 2e^{-s}/1+8.5s+22.5s^2+18s^3$

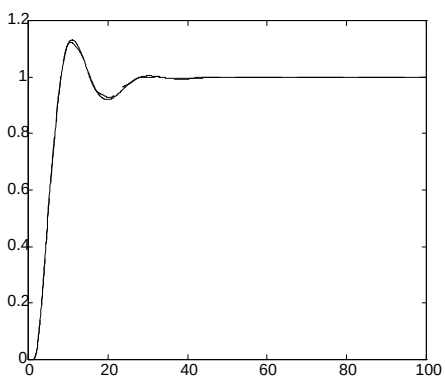

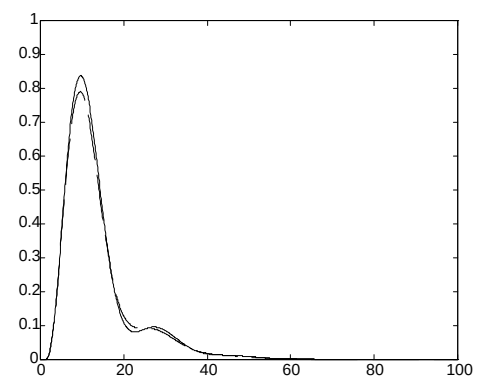

(c) $G_p e^{-s\tau_p} = 2.8e^{-1.3s}/1+11s+29.3s^2+23.4s^3$

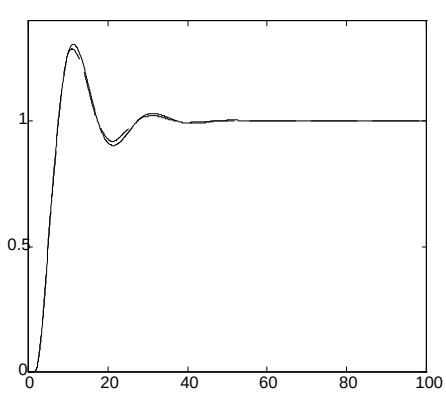

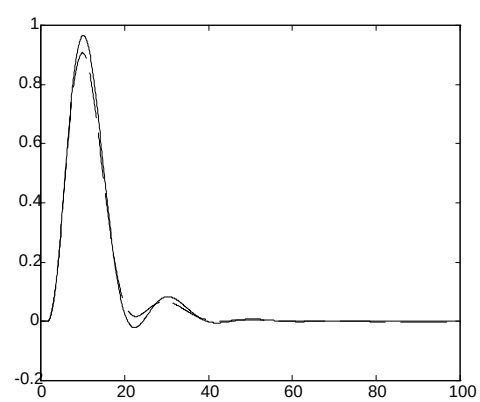

5. Sensitivity analysis

The sensitivity of the servo and regulator responses of the modified Smith predictor to changes in the process parameter values has been investigated; it has been calculated that the ratio of the sensitivities (with respect to each process parameter) of the modified Smith predictor to those of the Smith predictor may be expressed as follows:

$$R = \frac{1 - K_2(s)M^*(s)}{1 - M(s)} \tag{9}$$

with $M^*(s)$ and $M(s)$ being the servo responses of the modified Smith predictor and the Smith predictor, respectively, and with $K_2(s)$ being the approximation of the time advance term. If this ratio is calculated at low frequencies, for a general process and model structure, and if a PI controller is used as the primary compensator, the following relationship applies:

$$R = 1 - \left[K_c K_m \tau_m / (1 + p)(K_c K_m \tau_m + 1) \right] \tag{10}$$

with K_c = controller gain and K_m, τ_m = model gain and time delay. This relationship means that the sensitivity of the modified Smith predictor to variations in process parameter values is smaller than that of the Smith predictor at low frequencies. Simulation results based on the implementation of equation (9) confirm this result, and further show that the sensitivity of the modified Smith predictor to variations in process parameter values may be larger than that of the Smith predictor at higher frequencies. However, since it is likely that process parameters will vary slowly, it may be concluded that the modified Smith predictor has a clear performance advantage over the Smith predictor.

Robust stability and performance criteria have been formulated for the modified Smith predictor, similar to those formulated for the Smith predictor by Morari and Zafiriou [13]. Unsurprisingly, the robust design of the modified Smith predictor is relatively complex.

6. Conclusions

A modification to the conventional Smith predictor structure for the control of a process with time delay has been proposed to facilitate the achievement of a modest improvement in the closed loop system responses. The modification involves approximating a time advance term that may be incorporated in the outer feedback loop of the predictor. It has been shown analytically and in simulation that the method facilitates performance improvement, particularly when the desired servo response is relatively unaggressive and/or when the process parameters change slowly.

7. References

[1] Smith, O.J.M., “Closer control of loops with dead time”, *Chemical Engineering Science*, Vol. 53, No. 5, pages 217-219, May 1957.

[2] Marshall, J.E., *Control of time-delay systems*, IEE Control Engineering Series 10. Peter Peregrinus Ltd., 1979.

[3] Kantor, J.C. and Andres, R.P. “The analysis and design of Smith predictors using singular Nyquist arrays”, *International Journal of Control*, Vol. 31, pages 655-664, 1980.

[4] Watanabe, K. and Ito, M., “A process model control for linear systems with delays”, *IEEE Transactions on Automatic Control*, Vol. AC-26, No. 6, pages 1261-1269, December 1981.

[5] Watanabe, K., Ishiyama, Y. and Ito, M. “Modified Smith predictor control for multivariable systems with delays and unmeasurable step disturbances”, *International Journal of Control*, Vol. 73, pages 959-973, 1983.
[6] Hocken, R.D., Salehi, S.V. and Marshall, J.E. “Time-delay mismatch and the performance of predictor control schemes”, *International Journal of Control*, Vol. 38, pages 433-447, 1983.
[7] Romagnoli, J.A., Karim, M.N., Agamennoni, O.E. and Desages, A., “Controller designs for model-plant parameter mismatch”, *IEE Proceedings Part D*, Vol. 135, No. 2, pages 157-164, March 1988.
[8] Astrom, K.J., Hang, C.C. and Lim, B.C. “A new Smith predictor for controlling a process with an integrator and long dead time”, *IEEE Transactions on Automatic Control*, Vol. 39, pages 343-345, 1994.
[9] Dastych, J. “Analysis and design of control loops with dead-times”, *EURACO Workshop: Recent results in robust and adaptive control*, Florence, Italy, 1995.
[10] Benouarets, M. and Atherton, D.P. “Autotuning design method for a Smith predictor control scheme”, *Control '94. IEE International Conference on Control*, pages 795-800, 1994.
[11] Huang, H.-P., Chen, C.-L., Chao, Y.-C. and Chen, P.-L., “A modified Smith predictor with an approximate inverse of dead time”, *AIChE Journal*, Vol. 36, No. 7, pages 1025-1031, July 1990.
[12] Palmor, Z.J. and Powers, D.V. “Improved dead-time compensator controllers”, *AIChE Journal*, Vol. 31, pages 215-221, 1985.
[13] Morari, M. and Zafiriou, E., *Robust process control*, Prentice-Hall Inc., 1989.
[14] O’Dwyer, A. and Ringwood, J.V., “Model parameter and time delay estimation in the frequency domain”, *IDSPCC 95. Irish Colloquium on DSP and Control*, Queens University, Belfast, June 1995.

Acknowledgements

The partial financial assistance of the E.U. Training for Trainers scheme through the Dublin Institute of Technology is gratefully acknowledged.