Dublin Institute of Technology
ARROW@DIT

Conference papers

School of Electrical and Electronic Engineering

2003-01-01

New modified Smith predictor designs

Pauline Sourdille
Dublin Institute of Technology

Aidan O'Dwyer
Dublin Institute of Technology, aidan.odwyer@dit.ie

Follow this and additional works at: http://arrow.dit.ie/engscheleart

Part of the Controls and Control Theory Commons

Recommended Citation

Sourdille, Pauline and O'Dwyer, Aidan : New modified Smith predictor designs. Proceedings of the IFAC Workshop on Time Delay Systems, INRIA, Rocquencourt, France, September.

This Conference Paper is brought to you for free and open access by the School of Electrical and Electronic Engineering at ARROW@DIT. It has been accepted for inclusion in Conference papers by an authorized administrator of ARROW@DIT. For more information, please contact yvonne.desmond@dit.ie, arrow.admin@dit.ie.

This work is licensed under a Creative Commons Attribution-Noncommercial-Share Alike 3.0 License

4th IFAC Workshop on Time Delay Systems (TDS'03)
Rocquencourt, France, September 8-10, 2003

New Modified Smith Predictor Designs

Pauline Sourdille[ϕ] and Aidan O'Dwyer[*]

[ϕ]*Department of Control Systems*
Dublin Institute of Technology, Kevin Street
Dublin 8
IRELAND
E-mail: pauline.sourdille@dit.ie

[*]*Department of Control Systems*
Dublin Institute of Technology, Kevin Street
Dublin 8
IRELAND
E-mail: aidan.odwyer@dit.ie

Abstract: By combining several existing modified Smith predictor structures, presented in a literature review, a generalised form for the Smith predictor is proposed. From this structure, excellent servo and regulator responses can be obtained by specifying three controller dynamic elements. Two new modified Smith predictor structures are presented with their associated tuning rules. The results of the simulations indicate that the two new designs give better overall responses than the original Smith predictor. *Copyright © 2003 IFAC*

Keywords: Dead-time compensator, process control, control design.

1. INTRODUCTION

As is well known, good control of processes with long time delay may be difficult using PID control. In 1957, O. J. Smith (1957) developed the Smith predictor structure to compensate systems with time delay. This structure is a model-based structure, which uses a mathematical model of the process in a minor feedback loop. One of the advantages of the Smith predictor structure is that it can be easily extended from a single input-single output system to a multiple-input multiple-output system. Over the years, many modifications to the Smith predictor structure have been proposed to improve the servo response, the regulator response or both. These modifications were accomplished to adapt the structure to stable, integrative or unstable systems.

The paper reviews the modifications to the Smith predictor proposed in the literature, proposes a generalised form of the Smith predictor and then presents two new modified Smith predictor structures, with their associated tuning rules.

2. LITERATURE REVIEW

Over fifty articles were studied to identify the different existing modifications of the Smith predictor. Sourdille and O'Dwyer (2003a) present an extensive literature review of these modifications. In this section, only the articles exhibiting the structures used to design the generalised Smith predictor are presented.

2.1 Stable processes

Three types of modified Smith predictor structure may be identified for stable processes: Disturbance rejection improvement structures, Two degrees of freedom structures and Other structures. In their fast disturbance detector structure, Hang and Wong (1979) interchange the model dead time and the process model, which implies that the detector does not experience the dead time in the closed loop. A dynamical compensator is included in the main feedback loop in Watanabe et *al.*'s (1983) structure. Using the same structure, Romagnoli *et al.* (1985, 1988) use a filter designed to obtain pole-zero cancellation instead of the compensator. Palmor and Blau (1994) develop tuning rules for this structure. To approximate the dead time at low frequencies in the feed-forward path, Huang et *al.* (1990) include a compensator between the main feedback loop and the minor feedback loop.

The two degrees of freedom structure decouples the servo and regulator problems, which allows a separate design for each response. To do so, the "disturbance detector structure", developed by Datsych (1995), contains a controller in the feedback path coming back to the process model input, to optimise the regulator response. This structure was

also used by Hang and Wong (1979) for the control of unstable processes. The "double controller structure" (Tian and Gao, 1998a, 1998b, 1999a) feeds back the load controller signal before the disturbance input signal. Using this structure, Vrecko *et al.* (2001) add an extra network including a tuneable delay τ_x. By adding an extra network to the modified Smith predictor structure of Astrom *et al.* (1994), the "flexible Smith predictor" structure (Vrancic *et al.*, 1998) is obtained. Its associated tuning rules are proposed by Vrancic *et al.* (1999). Normey-Rico and Camacho (2002) add a set-point tracking controller before the main feedback loop. The authors explain that this structure may also be used for the control of integrative processes. The structure developed by Majhi and Atherton (1999) contains three controller dynamic elements and may be used to control stable, integrative or unstable processes.

Some modified Smith predictor structures are difficult to classify because their aims may be wider than one objective or their structure does not correspond to a specific form (one-degree or two degrees of freedom). For example, to overcome the problem of performance degradation due to the noise, Hang and Wong (1979) include a filter in the feedback path of the structure (labelled the "open loop filter structure"). Kantor and Andres' (1980) modified structure permits the elimination of the steady state servomechanism offset and the regulator errors, using two proportional controllers. Mitchell's (1990) modified Smith predictor contains a scaling filter between the two feedback loops and a predictive element in the main feedback path, which counteracts the effect of the delay.

2.2 Integrative processes

For integrative processes, two types of structure may be identified: dependent structures and two-degrees of freedom structures. Matausek and Micic (1996, 1999), for example, add a feedback path from the difference of the process output and model output signal. In their first proposal, the primary controller is a proportional controller and in their second proposal, the primary controller becomes a lead/lag controller.

As for stable systems, it is possible to obtain two degrees of freedom structures for integrative systems. Astrom *et al.* (1994) construct the major feedback loop between the controller and the disturbance input; a compensator is included in the feedback loop. Zhang and Sun (1996) extend this structure to control a general integrator/time delay process by developing a new transfer function for the load controller. This structure is extended to improve the system performance by Leonard (1998) and associated tuning rules for the primary controller are also developed. A new structure is developed by Tian and Gao (1999b), which contains a local proportional feedback to pre-stabilize the process, a proportional controller for set-point tracking and a PD controller for load disturbance rejection.

2. GENERALISED STRUCTURE

The general form of the Smith predictor is obtained by combining several of the existing modified structures (outlined above), which have common points, in one general structure. Figure 1 shows the generalised form and equations (1) and (2) represent the servo and regulator responses, respectively.

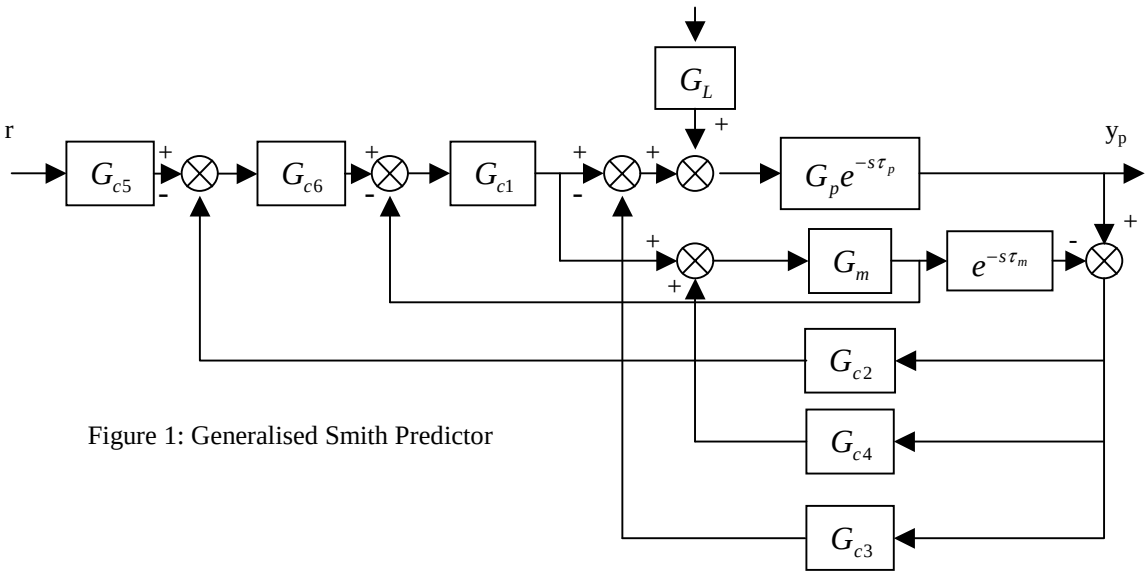

Figure 1: Generalised Smith Predictor

$$\frac{y_p}{r} = \frac{[1+(G_{c3}+G_{c4})G_m e^{-s\tau_m}]G_{c1}G_{c5}G_{c6}G_p e^{-s\tau_p}}{1+G_m G_{c1}+G_{c4}G_m e^{-s\tau_m}+G_{c3}G_p e^{-s\tau_p}+(G_{c3}+G_{c4})G_m G_{c1}G_p e^{-s\tau_p}+G_{c1}G_{c6}G_{c2}(G_p e^{-s\tau_p}-G_m e^{-s\tau_m})} \quad (1)$$

$$\frac{y_p}{L} = \frac{(1+G_{c1}G_m+G_{c4}G_m e^{-s\tau_m}-G_{c1}G_{c2}G_{c6}G_m e^{-s\tau_m})G_p e^{-s\tau_p}}{1+G_m G_{c1}+G_{c4}G_m e^{-s\tau_m}+G_{c3}G_p e^{-s\tau_p}+(G_{c3}+G_{c4})G_m G_{c1}G_p e^{-s\tau_p}+G_{c1}G_{c6}G_{c2}(G_p e^{-s\tau_p}-G_m e^{-s\tau_m})} \quad (2)$$

The requirements specified for the general structure are to obtain perfect servo response and regulator responses (i.e. $\frac{y_p}{r}=1$ and $\frac{y_p}{L}=0$) and that the controller transfer functions are only expressed in terms of the model parameters. It turns out that three primary controllers are needed: one to optimise the servo response, one to optimise the regulator response and one to reduce the mismatch between the process and the model. G_{c1}, G_{c5} and G_{c6} are equal to 1, and G_{c2}, G_{c4} and G_{c3} are equal to 0 when they are not used. After calculating each possible combination of controller triplets, only fifteen cases are realisable, as some possibilities do not achieve the requirements (i.e. three controllers used, only model parameters used to express the controllers transfer functions). From these realisable cases, only three cases are considered, as their controller transfer functions are of the simplest form to limit any necessary approximations.

4. CASES STUDIED

4.1 First modified Smith predictor

The first modified Smith predictor structure employs G_{c3}, which optimises the servo response, G_{c1}, which optimises the regulator response and G_{c2}, which reduces the mismatch term between the process and the process model. This structure is fully explained in Sourdille and O'Dwyer (2003a). From this article, it is found that the controllers are given by equations (3), (4) and (5) and that the associated tuning rules, depending on the index $\frac{\tau_m}{T_m}$, are given by Table 1 with values of α and p given by Table 2. (Note $G_m e^{-s\tau_m}=\frac{K_m}{T_m s+1}e^{-s\tau_m}$)

$$G_{c2}=0 \text{ (3)},\quad G_{c1}=\frac{T_m s+1}{K_m T_1 s} \text{ (4) and}$$

$$G_{c3}=\frac{\alpha T_m s+1}{\alpha K_m T_2 s}\frac{1+B(s)}{1+B(s)e^{-s\tau_m}} \quad (5)$$

Where $B(s)=\frac{T_m s+1}{T_m s+p}$.

	G_{c1}	G_{c3}
$0<\frac{\tau_m}{T_m}\le 0.5$	$T_1=\frac{0.01T_m}{K_m}$	$T_2=\frac{T_m}{K_m}$
$0.5<\frac{\tau_m}{T_m}\le 1$	$T_1=\frac{0.01T_m}{K_m}$	$T_2=T_m$
$1<\frac{\tau_m}{T_m}\le 2$	$T_1=\frac{0.01T_m}{K_m}$	$T_2=\frac{5T_m}{K_m}$

Table 1: Tuning rules for the first modified Smith predictor

	α	p
$0<\frac{\tau_m}{T_m}\le 0.5$	$1\le\alpha\le 2$	$p=10$
$0.5<\frac{\tau_m}{T_m}<1$	$1\le\alpha\le 2$	$2\le p\le 5$
$1<\frac{\tau_m}{T_m}\le 2$	$0.5\le\alpha\le 1.5$	$2\le p\le 5$

Table 2: Range of values for α and p

4.2 Second modified Smith predictor

The second modified Smith predictor structure employs G_{c3}, which optimises the servo response, G_{c4}, which optimises the regulator response and G_{c2}, which reduces the mismatch term between the process and the process model. This modified Smith predictor is presented in detail by Sourdille and O'Dwyer (2003b). This article explains in detail the step by step procedure to obtain the controller transfer function given by equations (6), (7) and (8) and the associated tuning rules depending on the index $\frac{\tau_m}{T_m}$, are given by Table 3, with values of α and p given by Table 4.

$$G_{c2}=0 \text{ (6)},\quad G_{c3}=\frac{T_m s+1}{\alpha K_m T_2 s}\frac{1+B(s)}{1+B(s)e^{-s\tau_m}} \text{ (7) and}$$

$$G_{c4}=-\frac{T_m s+1+K_m}{K_m(T_1 s+K_1)}\frac{1+B(s)}{1+B(s)e^{-s\tau_m}} \quad (8)$$

Where $B(s)=\frac{T_m s+1}{T_m s+p}$.

K_c is a proportional controller introduced at the command signal to eliminate an offset observed in the servo and regulator responses.

	K_c	G_{c3}	G_{c4}
$0<\frac{\tau_m}{T_m}\le 0.5$	$\frac{K_m+1}{K_m}$	$T_2=\frac{T_m}{K_m}$	$T_1=50T_m$ $K_1=100$
$0.5<\frac{\tau_m}{T_m}\le 1$	$\frac{K_m+1}{K_m}$	$T_2=T_m$	$T_1=50T_m$ $K_1=100$
$1<\frac{\tau_m}{T_m}\le 2$	$\frac{K_m+1}{K_m}$	$T_2=\frac{5T_m}{K_m}$	$T_1=50T_m$ $K_1=100$

Table 3: Tuning rules for the second modified Smith predictor

	α	p
$0<\frac{\tau_m}{T_m}\le 0.5$	$0.5\le\alpha\le 2$	$4\le p\le 10$
$0.5<\frac{\tau_m}{T_m}<1$	$2\le\alpha\le 3$	$1\le p\le 1.5$
$1<\frac{\tau_m}{T_m}\le 2$	$1\le\alpha\le 2$	$2\le p\le 10$

Table 4: Range of values for α and p

4.3 Third modified Smith predictor

G_{c5} will optimise the servo response, G_{c4} will optimise the regulator response and G_{c2} will eliminate the mismatch between the process and the model. The following expressions may be calculated for G_{c2}, G_{c5} and G_{c4} by designing for optimum servo and regulator responses.

$$G_{c2} = 0 \quad (9), \quad G_{c5} = \frac{1+G_m}{G_m e^{-s\tau_m}} \quad (10),$$

$$G_{c4} = -\frac{1+G_m}{G_m e^{-s\tau_m}} \quad (11)$$

Using a first order lag for the non-delayed model, equations (10) and (11) become equations (12) and (13), respectively.

$$G_{c5} = \frac{T_m s + 1 + K_m}{K_m e^{-s\tau_m}} \quad (12) \text{ and}$$

$$G_{c4} = -\frac{T_m s + 1 + K_m}{K_m e^{-s\tau_m}} \quad (13)$$

The inverse of the delay is approximated using the approximation detailed by Sourdille and O'Dwyer (2003a). Expressions (14) and (15) are the realisable controller forms of equations (12) and (13).

$$G_{c5} = \frac{T_m s + 1 + K_m}{K_m (T_1 s + 1)} * \frac{1 + B(s)}{1 + B(s) e^{-s\tau_m}} \quad (14) \text{ and}$$

$$G_{c4} = \frac{T_m s + 1 + K_m}{K_m (T_1 s - 1)} * \frac{1 + B(s)}{1 + B(s) e^{-s\tau_m}} \quad (15)$$

5. SIMULATION

For space reasons, only the results for the first and second modified Smith predictor are presented.

The full panorama of simulation results covered by seven benchmark processes and their models show that it is almost always possible to achieve both better servo and regulator responses using the modified Smith predictors proposed instead of using the Smith predictor.

The primary controller for the Smith predictor is designed to achieve perfect responses (i.e. $\frac{y_p}{r} = 1$ and $\frac{y_p}{L} = 0$). This gives a primary controller of the following form (equation (16)) and its implementable approximation is given by equation (17).

$$G_c = -\frac{T_m s + 1}{K_m (1 - e^{-s\tau_m})} \quad (16) \text{ and}$$

$$G_c = \frac{T_m s + 1}{K_m (s+1)(1 - e^{-s\tau_m})} \quad (17)$$

5.1 First modified Smith predictor

Table 5 shows the number of simulations in which improvement in response was detected, when the modified Smith predictor was used instead of the Smith predictor, with the responses evaluated using the four indices (Integral Absolute Error-IAE, Integral Squared Error-ISE, Integral Time multiplied by Squared Error-ITSE and Integral of Squared Time multiplied by Squared Error-ISTSE). Three simulations are conducted on each of seven benchmark processes and models, giving 21 simulations results altogether.

	IAE	ISE	ITSE	ISTSE
Servo responses	20	21	20	17
Regulator responses	21	21	21	21
Corresponding Percentage	98%	100%	98%	91%

Table 5: Improvement in responses noted when the first modified Smith predictor is used

5.2 Second modified Smith predictor

Table 6 shows the number of simulations, in which improvement in response was detected, when the modified Smith predictor was used instead of the Smith predictor, with the responses evaluated using the four indices.

	IAE	ISE	ITSE	ISTSE
Servo responses	18	14	17	15
Regulator responses	21	21	19	18
Corresponding percentage	93%	83%	85%	79%

Table 6: Improvement in responses noted when the second modified Smith predictor is used

From Tables 5 and 6, it may be concluded that better servo and regulator responses are achieved in the vast majority of cases when the modified Smith predictors are used instead of the corresponding Smith predictor, especially for regulator responses. This is significant, as it is recognised that the Smith predictor structure facilitates relatively poor regulator responses.

5.3 Comparison between the two modified Smith predictor structures

A comparison between the two modified Smith predictor structures is effected to evaluate which modified Smith predictor structure achieves better responses. Table 7 shows the number of simulations in which improvement in response was detected, when the first modified Smith predictor was used instead of the second modified Smith predictor, with the responses evaluated using the relevant indices.

	IAE	ISE	ITSE	ISTSE
Servo response	19	21	21	16
Regulator responses	2	1	3	5

Table 7: Improvement in responses noted when the first modified Smith predictor is used instead of the second modified Smith predictor

Figures 2, 3 and 4 show three representative simulation results corresponding to each range of index $\frac{\tau_m}{T_m}$. All simulations are carried out in MATLAB/SIMULINK, and in all cases, the process model parameters are obtained using an open loop frequency domain identification technique (O'Dwyer, 2002).

1.1.1. $0 < \frac{\tau_m}{T_m} \leq 0.5$

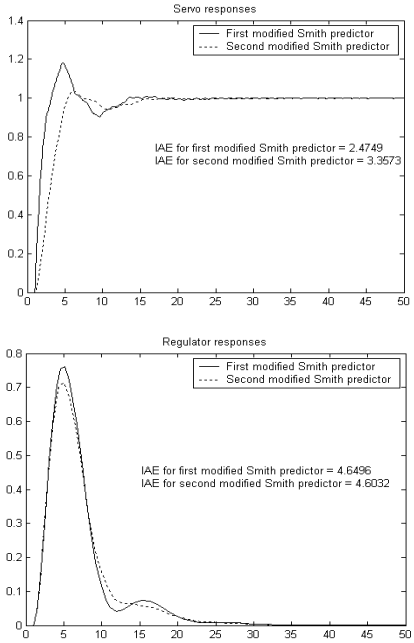

Figure 2: Servo and regulator responses

1.1.2. $0.5 < \frac{\tau_m}{T_m} \leq 1$

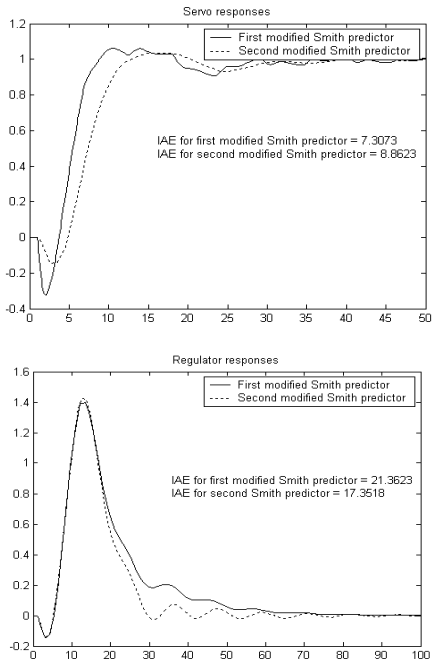

Figure 3: Servo and regulator responses

1.1.3. $1 < \frac{\tau_m}{T_m} \leq 2$

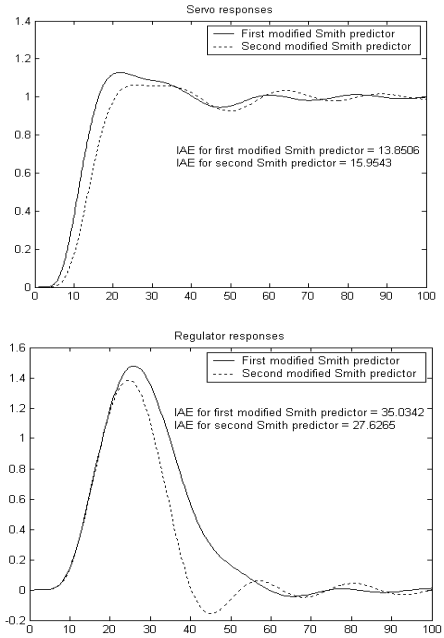

Figure 4: Servo and regulator responses

So, it can be said that the first modified Smith predictor achieves better servo responses and the second modified Smith predictor achieves better regulator responses.

6. CONCLUSION

From a generalised Smith predictor structure, two new structures are presented with their associated tuning rules. From the simulations of our implementations of these structures, it may be concluded that it is almost always possible to achieve both better servo and regulator responses with the modified Smith predictors compared with the responses achieved with a Smith predictor structure. The first modified Smith predictors gives excellent servo responses and the second modified Smith predictor gives excellent regulator responses.

REFERENCES

Astrom, K.J., Hang, C.C. and Lim, B.C. (1994). A new Smith predictor for controlling a process with an integrator and long dead time, *IEEE Transactions on Automatic Control*, **39**, 343-345.

Dastych, J. (1995). Analysis and design of control loops with dead-times, *EURACO Workshop: 'Recent results in robust and adaptive control'*, 420-439, Florence, Italy.

Hang, C.C. and Wong, F.S. (1979). Modified Smith predictors for the control of processes with dead time, *Proceedings of the ISA Conference and*

Exhibition. Advances in Instrumentation and Control, *34*, 2, 33-44, Chicago, IL., U.S.A.

Huang, H.-P., Chen, C.-L., Chao, Y.-C. and Chen P.-L. (1990). A modified Smith predictor with an approximate inverse of dead time, *AIChE Journal*, **36**, 1025-1031.

Kantor, J.C. and Andres, R.P. (1980). The analysis and design of Smith predictors using singular Nyquist arrays, *International Journal of Control*, **31**, 655-664

Leonard, F. (1998). Tuning of a modified Smith predictor, *Proceedings of the IFAC Conference: System Structure and Control*, Nantes, France, 571-574.

Majhi, S. and Atherton, D.P. (1999b). Modified Smith predictor and controller for processes with time delay, *IEE Proceedings – Control Theory and Applications*, **146**, 5, 359-366.

Matausek, M.R. and Micic, A.D. (1996). A modified Smith predictor for controlling a process with an integrator and lond dead-time, *IEEE Transactions on Automatic Control*, **41**, 1199.

Matausek, M.R. and Micic, A.D. (1999). On the modified Smith predictor for controlling a process with an integrator and long dead-time, *IEEE Transactions on Automatic Control*, **44**, 8, 1603-1606.

Mitchell, R.J. (1990). Multi-microprocessor control of processes with pure time delay, *Transactions of the Institute of Measurement and Control*, **12**, 58-64.

Normey-Rico, J.E. and Camacho, E.F. (2002). A Unified Approach to Design Dead-Time Compensators for Stable and Integrative Processes with Dead Time, *IEEE Transactions on Automatic Control*, **47**, 2, 299-305.

O'Dwyer, A. (2002). A frequency domain technique for the estimation of the parameters of a delayed process. *Transaction of the Institute of Measurement and Control*, 24, 4, 277-288.

Palmor, Z.J. and Blau, M. (1994). An auto-tuner for Smith dead time compensator, *International Journal of Control*, **60**, 117-135.

Romagnoli, J.A., Karim, M.N., Agamennoni, O.E. and Desages, A. (1985). Controller designs for model-plant parameter mismatch, *Proceedings of the ISA/85 International Conference and Exhibition. Advances in Instrumentation*, Philadelphia, Penn., U.S.A., **40**, 1, 441-452.

Romagnoli, J.A., Karim, M.N., Agamennoni, O.E. and Desages, A. (1988). Controller designs for model-plant parameter mismatch, *IEE Proceedings, Part D*, **135**, 157-164.

Sourdille, P. and O'Dwyer, A. (2003a) An outline and further development of Smith predictor based methods for compensation of processes with time delay. *Accepted by Irish Signals and Systems Conference 2003*.

Sourdille, P. and O'Dwyer, A. (2003b) A new modified Smith predictor Design. *Accepted by International Symposium on Information and Communication Technologies Conference 2003*.

Smith, O.J.M. (1957). Closer control of loops with dead time, *Chemical Engineering Progress*, **53**, 217-219.

Tian, Y.-C. and Gao, F. (1998a). Double-controller scheme for seperating load rejection from set-point tracking, *Transactions of the Institute of Chemical Engineers*, **76**, Part A, 445-450.

Tian, Y.-C. and Gao, F. (1998b). Double-controller scheme for control of processes with dominant delay, *IEE Proceedings - Control Theory and Applications*, **145**, 5, 479-484.

Tian, Y.-C. and Gao, F. (1999a). Injection velocity control of thermoplastic injection moulding via a double controller scheme, *Industrial Engineering Chemistry Research*, **38**, 9, 3396-3406.

Tian, Y.-C. and Gao, F. (1999b). Control of integrator processes with dominant time delay, *Industrial Engineering Chemistry Research*, **38**, 8, 2979-2983.

Vrancic, D., Badillo, S.O.A. and Strmcnik, S. (1998). Flexible Smith predictor controller, Proceedings of the *7th Electrotechnical and Computer Science Conference*, Portoroz, Slovenia, Part A, 287-290.

Vrancic, D., Vrecko, D., Juricic, D. and Strmcnik, S. (1999). Automatic tuning of the flexible Smith predictor controller, *Proceedings of the American Control Conference*, Preprints, Session FM14.

Vrecko, D., Vrancic, D., Juricic, D. and Strmcnik, S. (2001). A new modified Smith predictor: the concept, design and tuning, *ISA Transactions*, **40**, 111-121.

Watanabe, K., Ishiyama, Y. and Ito, M. (1983). Modified Smith predictor control for multivariable systems with delays and unmeasurable step disturbances, *International Journal of Control*, **73**, 959-973.

Zhang, W.D. and Sun, Y.X. (1996). Modified Smith predictor for controlling integrator/time delay processes, *Industrial Engineering Chemistry Research*, **35**, 2769-2772.