Dublin Institute of Technology
ARROW@DIT

Conference papers

School of Electrical and Electronic Engineering

2008-01-01

Fast and Simple High Resolution Optical Spectrum Analyser

Kai-Uwe Lauterback
Deutsche Telekom Fachhochschule Leipzig

Thomas Schneider
Deutsche Telekom Fachhochschule Leipzig

Ronny Henker
Deutsche Telekom Fachhochschule Leipzig

Max Ammann
Dublin Institute of Technology, max.ammann@dit.ie

Andreas Thomas Schwarzbacher
Dublin Institute of Technology

Follow this and additional works at: http://arrow.dit.ie/engschececon

Part of the Electrical and Computer Engineering Commons

Recommended Citation

Lauterback, K. et al. (2008) Fast and simple high resolution optical spectrum analyser. CLEO/QELS 2008 : *Conference on Quantum Electronics and Laser Science*, pp.1-2. San Jose, CA., 4-9 May, 2008.

This Conference Paper is brought to you for free and open access by the School of Electrical and Electronic Engineering at ARROW@DIT. It has been accepted for inclusion in Conference papers by an authorized administrator of ARROW@DIT. For more information, please contact yvonne.desmond@dit.ie, arrow.admin@dit.ie.

This work is licensed under a Creative Commons Attribution-Noncommercial-Share Alike 3.0 License

© 2008 OSA / CLEO/QELS 2008

Fast and simple high resolution optical spectrum analyzer

Kai-Uwe Lauterbach, Thomas Schneider, Ronny Henker
Hochschule fuer Telekommunikation Leipzig, Gustav-Freytag Str. 43-45, D-04277 Leipzig, Germany
kai-uwe.lauterbach@hft-leipzig.de
Max James Ammann, Andreas Thomas Schwarzbacher
School of Electronic & Communications Engineering, Dublin Institute of Technology, Kevin Street Dublin 8, Ireland

Abstract: A simple method for fast optical spectroscopy with high resolution is shown. The method is based on the narrowband Brillouin gain process in optical fibers.
©2008 Optical Society of America
OCIS codes: (300.6320) High Resolution Spectroscopy; (290.5830) Brillouin Scattering

The measurement of the spectrum of optical sources is very important in science and technology. So, for instance in optical communication and transmission systems. Due to the nonlinear characteristics of optical components in such a system it is of prime importance to know the optical transmission spectrum.
Commonly, diffraction grating based optical spectrum analysers (OSA) are used for this purpose. The typical resolution bandwidth of an OSA lies in the range of 0.06nm, which corresponds to 7.5GHz at 1550nm. In [1] a wavelength measurement method with a resolution bandwidth in the femtometer range was presented. The method relies on the high resolution of a Fabry-Perot interferometer. Another possibility is the self-heterodyne-beating [2], where the optical bandwidth is transformed into the electrical domain by the beating between the signal and a phase delayed copy of it. In this case the transformed signal can be measured by a PIN photodiode and a radio frequency spectrum analyzer. In [3] and [4] a new measurement method was described, which relies on the very small bandwidth of the Brillouin effect. This method allows a resolution bandwidth in the femtometer range. The achievable resolution depends on the spectral filtering of the Brillouin scattering [5]. The method is based on the change of the pump wavelength by either a tunable laser source [3] or a by a modulator [5]. The measurement time of both methods is rather low since it depends on the sweep time of the tunable laser or the frequency generator which defines the modulator frequency. Here we will present a simple method to reduce the sweep time of Brillouin based spectrum analyzers significantly. Furthermore, the method is very simple since it requires neither a modulator nor a tunable laser.
The principal setup of our proof of concept is shown in Fig. 1. From the left side the unknown signal under test (S.U.T.) propagates through the standard single mode fiber (SSMF). From the other side the pump wave is injected into the same fiber via an optical circulator. All signals at the output of the SSMF are coupled into a photodetector on port 3 of the circulator. The electrical output voltage of the photodetector is measured by a digital sampling oscilloscope.

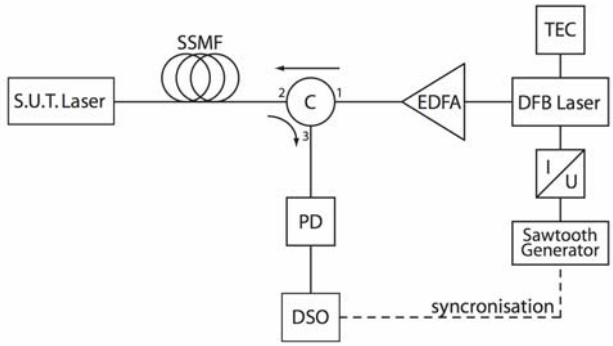

Figure 1: Experimental setup. S.U.T. Laser: signal under test laser; SSMF: standard single mode fiber; C: circulator; PD: photodetector; DSO: digital sampling oscilloscope; EDFA: erbium-doped fiber amplifier; TEC: temperature controller; U/I: voltage-to-current converter

As pump laser we used a conventional DFB laser diode (Anritsu, GB5A016) at 1538nm. The wavelength of the pump laser can be controlled by the laser diode injection current over the range of approximately 1nm. That corresponds to a frequency change of around 130GHz at 1538nm. The variation is realized by a sawtooth generator followed by a voltage-to-current converter. The emission wavelength of the DFB laser diode follows a nonlinear characteristic in comparison to the function of the sawtooth generator. Hence, the measured results have to be corrected.

978-1-55752-859-9/08/$25.00 ©2008 IEEE

Authorized licensed use limited to: DUBLIN INSTITUTE OF TECHNOLOGY. Downloaded on April 24, 2009 at 10:25 from IEEE Xplore. Restrictions apply.

© 2008 OSA / CLEO/QELS 2008

The injection current for the threshold of the DFB laser diode is 11mA and the maximum injection current is 150mA. For this range the output power of the DFB laser diode is -1.85dBm for 11mA and 14.9dBm for 150mA. We stabilize the output amplitude of the DFB laser diode by using an EDFA in the automatic power control mode. Due to this, a stable amplitude over the tunable wavelength range can be achieved. The tunable emission wavelength of the DFB laser diode serves as the pump wave for the Brillouin process which produces a narrowband Brillouin gain. This narrowband Brillouin gain has a FWHM bandwidth of 23MHz for our SSMF and is 84,43pm upshifted in wavelength domain. The power of the pump wave is well below the threshold for stimulated Brillouin scattering.
If the emission spectrum of the S.U.T. does not correspond with the Brillouin gain bandwidth the output voltage of the photodetector is nearly zero. If at least a part of the unknown S.U.T. spectrum is in the Brillouin gain bandwidth it will be amplified and the electrical output voltage at the photodetector begins to rise. This output voltage is recorded by a digital sampling oscilloscope (DSO) which is synchronized to the sawtooth generator. The DSO shows the intensity spectrum of the unknown S.U.T. laser if the nonlinear characteristic line is involved. The resolution of the DSO was adjusted to 250kSample/s. Hence, for the maximum wavelength range of 1nm (130GHz at 1538nm) the frequency distance between two sampling points at the DSO is approximately 1MHz.
For the proof of concept we used an externally phasemodulated DFB Laser as the S.U.T. laser at 1538nm. The measured optical spectra are shown in Fig. 2. In the left figure the external modulator was driven by a 3.2GHz sinusoidal signal. The measurement plot for a 3.2GBit/s non-return-to-zero (NRZ) pseudo-random-binary signal (PRBS) is shown in the right part of Fig. 2.

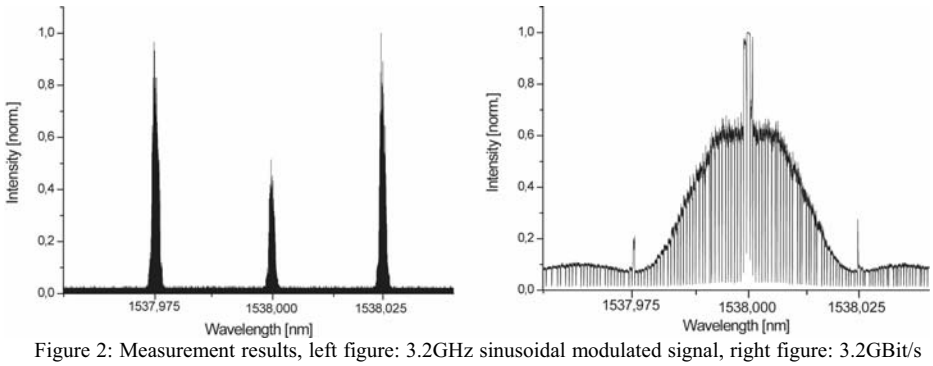

Figure 2: Measurement results, left figure: 3.2GHz sinusoidal modulated signal, right figure: 3.2GBit/s PRBS NRZ modulated signal

The resolution bandwidth of our measurement method depends on the gain-bandwidth of the Brillouin process in the fiber. Hence, for the SSMF in our setup the resolution bandwidth is 23MHz. Special fibers such as AllWave and TrueWave have a Brillouin gain bandwidth of only 11.4 and 12.4 MHz [5]. The minimum achievable sweep time depends on the regulation speed of the EDFA output power. The frequency of the sawtooth generator was adjusted to 100Hz. Therewith the sweeptime is 10ms over the whole tunable wavelength range. In our case a decrease of the sweep time was not possible because of the EDFA regulation speed. In order to reduce the measurement time drastically the method can be used without an additional EDFA. In this case the nonlinear characteristic of the Brillouin amplification in dependence on the Laser injection current has to be included in the measured results.
We have shown a very simple and potential fast measurement method for the optical spectrum analysis with a resolution in the femtometer range. Furthermore, this method has the potential to increase the sweep frequency up to the maximum modulation frequency of the used pump laser diode.

References:
[1] T.R. Parker, M. Farhadiroushan, “Femtometer resolution optical wavelength meter” IEEE Phot. Technol. Lett. Vol. 13, No.4, pp.347- 349, 2001
[2] J. A. Constable and I. H. White, “Laser linewidth measurement using a Mach-Zehnder interferometer and an optical amplifier”, Electron. Lett. Vol. 30, No.2, pp. 140-141, 1994.
[3] J. M. Subias Domingo, J. Pelayo, F. Villuendas, “Very High Resolution Optical Spectrometry by Stimulated Brillouin Scattering”, Phot. Tech. Let. Vol. 17, No.2, pp. 855-857, 2005.
[4] Th. Schneider, “Wavelength and line width measurement of optical sources with femtometre resolution” Electron. Lett. Vol. 41, No.22, pp.1234-1235, 2005.
[5] A. Yeniay, J.M. Delavaux, and J. Toulouse, “Spontaneous and stimulated Brillouin scattering gain spectra in optical fibers”, J. Lightw. Technol., Vol.20, No.8, pp. 1425-1432, 2002.

Authorized licensed use limited to: DUBLIN INSTITUTE OF TECHNOLOGY. Downloaded on April 24, 2009 at 10:25 from IEEE Xplore. Restrictions apply.