Dublin Institute of Technology
ARROW@DIT

Conference Papers

School of Civil and Building Services Engineering

2006-01-01

Determination of Characteristic Bridge DAF using Dynamic Finite Element Analysis of Critical Static Loading Scenarios

Colin C. Caprani
Dublin Institute of Technology, colin.caprani@dit.ie

Paraic Rattigan

Arturo Gonzalez

E. J. O'Brien

Follow this and additional works at: http://arrow.dit.ie/engschcivcon

Part of the Civil and Environmental Engineering Commons

Recommended Citation

Caprani, C., Rattigan, P., Gonzalez, A., O'Brien, E.: Determination of characteristic bridge DAF using dynamic finite element analysis of critical static loading scenarios. Third National Symposium on Bridge and Infrastructure Engineering in Ireland, eds. N.A. Ni Nuallain, A. O'Connor and K. Gavin, Trinity College Dublin and University College Dublin, pp.21-28.

This Conference Paper is brought to you for free and open access by the School of Civil and Building Services Engineering at ARROW@DIT. It has been accepted for inclusion in Conference Papers by an authorized administrator of ARROW@DIT. For more information, please contact yvonne.desmond@dit.ie, arrow.admin@dit.ie.

Dublin Institute of Technology
ARROW@DIT

Articles | School of Civil and Building Services Engineering

2006-01-01

Determination of characteristic bridge DAF using dynamic finite element analysis of critical static loading scenarios

Colin C. Caprani
Dublin Institute of Technology, colin.caprani@dit.ie

Paraic Rattigan

Arturo Gonzalez

E. J. O'Brien

Recommended Citation

Caprani, Colin C. et al: Determination of characteristic bridge DAF using dynamic finite element analysis of critical static loading scenarios. Third National Symposium on Bridge and Infrastructure Engineering in Ireland, eds. N.A. Ni Nuallain, A. O'Connor and K. Gavin, Trinity College Dublin and University College Dublin, pp.21-28.

This Conference Paper is brought to you for free and open access by the School of Civil and Building Services Engineering at ARROW@DIT. It has been accepted for inclusion in Articles by an authorized administrator of ARROW@DIT. For more information, please contact yvonne.desmond@dit.ie, arrow.admin@dit.ie.

Determination of Characteristic Bridge DAF using Dynamic Finite Element Analysis of Critical Static Loading Scenarios

Rattigan, P.H., González, A., OBrien, E.J., Caprani, C.C.

Abstract

The development of accurate codes for the design of bridges and the evaluation of existing structures requires adequate assessment of site-specific heavy traffic loading and also the dynamic interaction that may occur as this traffic traverses the structure. Shortcomings in current design codes occur due to the relatively independent manner in which critical static loading values and the corresponding allowance for dynamic amplification factor (DAF) are obtained. It is important that an approach is adopted that allows for the reduced probability of both high static loading and high dynamic amplification occurring simultaneously.
Consideration of only relevant critical loading events will allow for efficient and accurate determination of independent values for characteristic (lifetime-maximum) static and total load effects.
This paper proposes a method whereby initially the critical static loading scenarios for a chosen bridge are determined, from Monte Carlo simulation using weigh-in-motion (WIM) data from a typical European route. The development of a database of 3-dimensional finite element bridge and truck models allows for the analysis of these various different combinations of vehicular loading patterns. Thus the bridge specific critical loading scenarios are modelled and analysed individually to obtain the critical total (dynamic + static) load effect. It will then be possible to obtain a correlation between critical static load effect and corresponding total load effect/DAF and to extrapolate a characteristic DAF. This approach can lead to significant savings in structural design/assessment where site-specific maximum design load effects are determined from measured traffic data and experimental bridge-truck dynamic interaction.

Keywords: Bridge, Dynamic, Finite Element, Critical Loading, Characteristic DAF

Paraic Rattigan has a Bachelors degree in Civil Engineering from University College Dublin 2003. He is currently pursuing a PhD in the Bridge and Transportation Infrastructure Research Group of UCD, with the aid of an Irish Research Council Scholarship, and under the supervision of Prof. Eugene OBrien and Dr. Arturo González. Has presented research at recent international conferences such as IABMAS06, Oporto, EURODYN 05, Paris, and MSO 04, Hawaii. Represented Ireland at the young researchers seminar, YRS 05, in The Hague.

Dr. Arturo González has Bachelor degree in Civil Engineering from the University of Cantabria (Spain) and MSc & Ph.D. degrees from TCD. He carried out post-doctoral research as Pierse-Newman Scholar in UCD for two years. He has been lecturing in UCD since 2003. Has participated in the EU Transport projects WAVE, COST 323 and COST 345. He is currently UCD coordinator for ARCHES, a European 6th framework project on Assessment of Highway Structures. Areas of expertise cover numerical modelling of trucks, pavements and bridges, structural dynamics and weigh-in-motion. He is author of more than 30 technical papers.

Prof. Eugene OBrien has Bachelors and Masters degrees in Civil Engineering from UCD and a Ph.D. from the University of Calgary. He worked with firms of Consulting Engineers for 5 years before joining Trinity College Dublin as a lecturer in 1990. In 1998 he was appointed professor and Head of Civil Engineering at University College Dublin. He is currently Director of the UCD Institute for Sustainable Development (incorporating Urban Institute Ireland). He is author of over 100 scientific papers and two books.

Colin Caprani studied at DIT Bolton St. and graduated first in the class of 1999 with a First Class Honours Degree in Structural Engineering. After over 2 years in building structures consultancy, he commenced his PhD research into bridge traffic loading at UCD under Prof. Eugene OBrien. He obtained his PhD in 2006 and has published 18 scholarly articles to-date. Presently he lectures in both UCD and DIT Bolton St, and also works with Roughan & O'Donovan Consulting Engineers in the design of bridges.

INTRODUCTION

Correct evaluation of the behaviour of highway bridges under heavy loading is extremely important both in the enhancing of design techniques, and also in the assessment of existing infrastructure. It is widely accepted that shortfalls exist in design codes due to inadequate consideration of the dynamic interaction between the bridge structure and the heavy vehicles crossing it [1].

In the case of medium span bridges (< 40 m), the critical traffic event typically consists of multiple heavy trucks crossing the bridge at the same time. These critical events are commonly obtained using Monte Carlo simulation in conjunction with measured Weigh in Motion (WIM) data [2,3,4]. Once the worst static case is known, the final traffic load is commonly calculated through the application of an amplification factor, DAF, that accounts for the dynamic component contained in the bridge response.

It is known that dynamic interaction is influenced by numerous bridge and vehicle dependent dynamic parameters, such as vehicle velocity, road profile, suspension and tyre stiffness etc. [5,6,7]. The dynamic amplification factors prescribed in design/assessment codes are inherently conservative as they are provided based only on a few general parameters that ignore many of these significant bridge and truck dynamic characteristics (in particular, in the Eurocode the dynamic amplification factor depends on two parameters: bridge length and shape of the influence line).

A certain degree of conservativeness is advisable, as load underestimation may lead to catastrophic failure of the structure over its projected life span. However needless expense must be avoided if possible whilst ensuring that extreme load events do not cause failure. It has been shown that, in many cases, the measured live load effects from field load tests are much lower than those predicted by analytical methods [8].

DAF can best be described as being 'an increase in the design traffic load resulting from the interaction of moving vehicles and the bridge structure and is described in terms of the static equivalent of the dynamic and vibratory effects' [9]. The common definition for DAF is presented in Eq. 1.

$$\mathrm{DAF}=\frac{E_{\mathrm{dyn}}}{E_{\mathrm{stat}}} \tag{1}$$

where E_{dyn} is the maximum total load effect experienced by the bridge from a loading event and E_{stat} is the maximum static load effect for the same event. The term total load effect represents the load effect due to dynamic loading, whereby bridge-truck interaction is considered.

In this paper the term DAF will apply to the dynamic amplification for an individual loading scenario, while the term characteristic DAF will apply to the DAF over a prescribed period of time, where maximum static response and maximum total response may not be initiated by the same loading scenario. Zhang et al [10] introduce Eq. (2) to represent the characteristic DAF, φ_u, for a particular bridge for a relevant period of time.

$$\varphi_u=\frac{\ddot{u}_{\mathrm{dyn}}}{\ddot{u}_{\mathrm{stat}}} \tag{2}$$

where $\ddot{u}_{dyn}$ is the maximum total load effect experienced by the bridge for a prescribed period of time, and $\ddot{u}_{stat}$ is the maximum static load effect for the same period.

A number of studies on the dynamic loading of beam and slab (girder) bridges have been carried out previously [11]. However the majority of these previous studies have been limited to planar beam, or grillage models. Dynamic bridge truck interaction models have been developed, using finite element packages, to aid the understating of the interaction that can be expected in vehicle crossing events [1,6,12].

This paper uses a finite element approach, to assess the levels of dynamic interaction occurring in critical bridge loading scenarios with the aim of developing a characteristic value for bridge specific DAF.

OVERVIEW OF FINITE ELEMENT MODELS

Bridge Model

The bridge chosen for this study is the Mura River Bridge, Slovenia. The bridge is 32m long and has two lanes of bi-directional traffic flow. The bridge, of beam and slab construction, is simply supported and forms part of a larger structure. Five concrete longitudinal beams support a concrete slab, with a layer of asphalt acting as the road surface. Five concrete diaphragm beams are also present in the transverse direction.

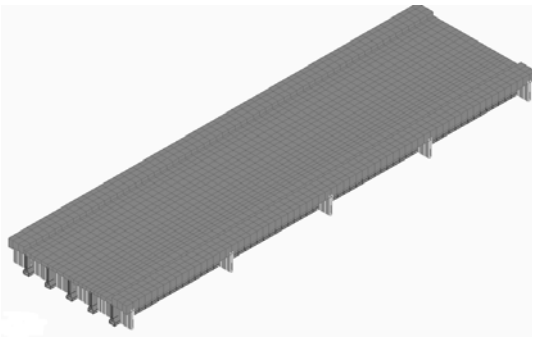

Fig. 1 NASTRAN Bridge Model

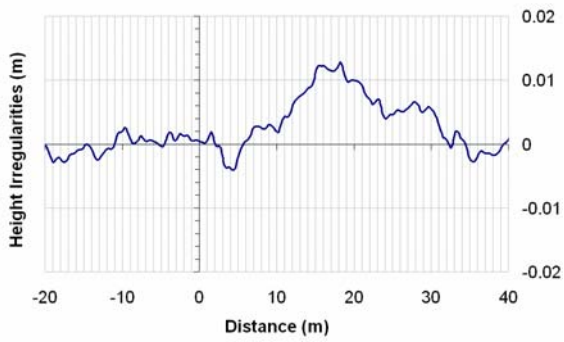

Fig. 2 Road Surface Profile

The bridge has been previously modelled, instrumented and validated [6]. The bridge is modelled using beam and plate elements, as shown in Fig.1, and the vibration mode shapes of the model are consistent with experimental results. A smooth road profile (Class A) is used to excite dynamics, and a section of this profile is presented in Fig.2.

Truck Models

The finite element truck models are modelled using rigid bodies supported by suspension and tyre systems. The body mass in the trucks is modelled as a point load distributed throughout the frame by rigid elements. This system allows quick and simple variation of truck weight. Fig. 3(a) shows a typical NASTRAN model for a 3-axle truck, while a representative 5-axle truck model is shown in Fig. 3(b).

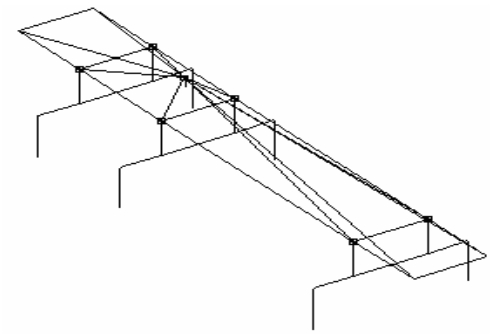

Fig. 3(a) 3-axle Truck Model

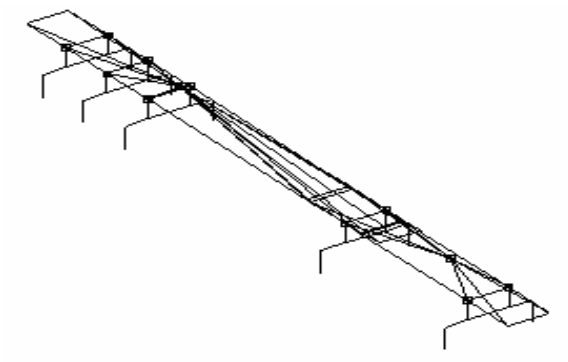

Fig. 3(b) 5-axle Truck Model

The 5-axle and 4-axle vehicle models allow for articulation between the tractor and trailer. The 3-axle and 2-axle vehicle models are rigid bodied. The suspensions and tyres are modelled as standard spring dashpot systems, using fixed values for stiffness and damping values taken from literature [13].

Simulation Set-Up

In order to conduct Monte Carlo simulation to obtain worst static load cases for the bridge it is necessary obtain the predicted static response from the NASTRAN Bridge model. It is decided to obtain the influence lines of midspan stress, for each of the 5 longitudinal beams, for both of the lane loading possibilities. It is noted that the longitudinal beams are not symmetrical about the bridge centre line, and as a result the influence lines for both allowable lane loadings must be obtained. Continental European driving laws are applicable (Left hand drive). Consequently the wheel paths for trucks in either lane are at 840mm and 2660mm from bridge centre-line for driver and passenger sides respectively. A schematic layout of the bridge is shown in Fig. 4.

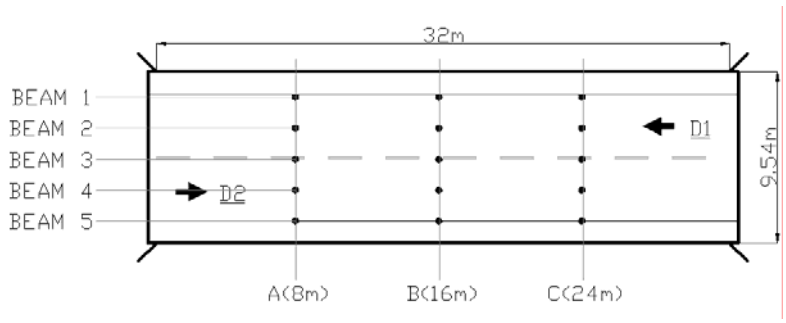

Fig. 4 Schematic of Bridge showing Beam Layout

The influence lines for each lane loading are obtained by placing a static load of 5kN on each of the wheel paths for the respective lane. This will be equivalent to a static axle load of 10kN

being applied by a particular truck axle. The loads are moved at 1m increments in the direction in which the traffic flows to obtain the influence lines as shown in Fig. 5(a) and Fig. 5(b) below.

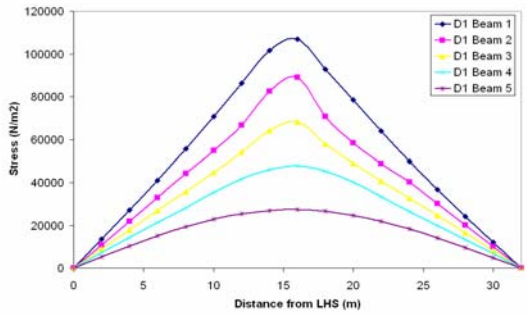

Fig. 5(a) Influence Lines for Load in Lane D1

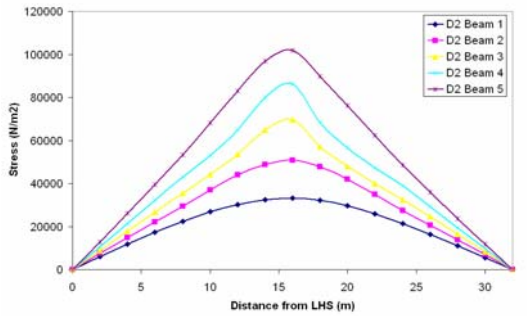

Fig. 5(b) Influence Lines for Load in Lane D2

The obtained influence lines can be then normalised to identify the response due to a unit axle load (1kN or 1kg/100). The obtained influence lines are then modelled numerically, in order to be used in the numerical simulations of bridge static response due to random traffic flow.
Eq. (3) below gives the method whereby numerical calculation of static load effect is achieved for each beam.

$$R(x) = \sum_{i=1}^{I} \sum_{n=1}^{N} W_i \sigma(x)_i \tag{3}$$

where:

R(x) is the static load effect at time x.
I is the number of trucks
N is the number of axles in truck i
Wi is the ith axle load in kN.
$\sigma(x)_i$ is the influence line ordinate at location x

A number of test simulations are carried out in order to assess the suitability/ accuracy of influence line theory, when compared with the NASTRAN model. The multi-axle test vehicles are passed down the FE bridge model at slow speeds (1m/s), in order to obtain the static response from the FE approach. The response is then compared with the numerical approach based on the fitted influence lines as given in Eq. (3). Fig. 6(a) and Fig. 6(b) show the static response achieved using both numerical simulation (influence Line) and NASTRAN simulation for a 2-axle test vehicle and a 5-axle test vehicle respectively.

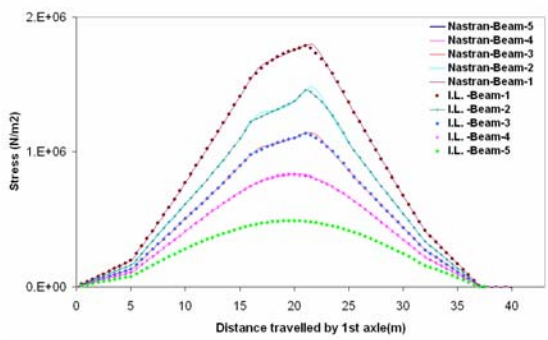

Fig. 6(a) Calibration 2-axle Truck Lane D1 (C2-1)

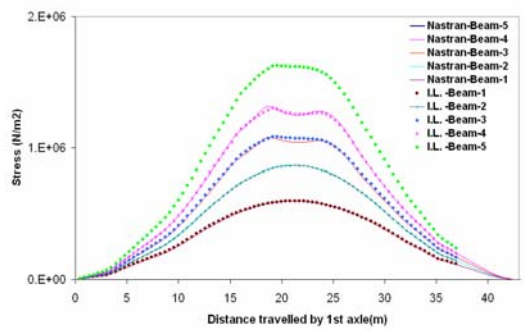

Fig. 6(b) Calibration 5axle Truck Lane D2 (C5-2)

As can be seen from Fig. 6(a) and Fig. 6(b) the numerical fits to the analysed influence lines, in conjunction with Eq. (2), can be used to accurately assess the static bridge response to

vehicle loading. The same will follow for multiple vehicle events, and as a result simulation of static response will be much less expensive computationally, as FE analysis is not required.

Selection of Critical Events

The load effect chosen for analysis will be the maximum bending moment in longitudinal Beam 1. Monte Carlo simulation is applied, using Weigh-In-Motion (WIM) data to generate 10 years of bi-directional, free-flowing traffic data. This traffic is passed over the influence line for Beam 1 to determine the static load effects that result. As stated previously typical critical events for medium span bridges consist of multiple vehicles crossing the bridge simultaneously [2], however all possible configurations of vehicles, and vehicle meeting events will be considered for dynamic analysis.

Statistical Calculation of Critical Static Loading Events

One week of WIM data was taken from the A6 motorway near Auxerre, France. The site has 4 lanes of traffic (2 in each direction) but only the traffic recorded in the slow lanes was used and it is acknowledged that this results in conservative loading. An average daily truck flow of 6744 trucks was analysed [4] for the statistical distributions of the traffic characteristics of the site for each lane, and numerical fits applied. Monte Carlo simulation of the prescribed traffic is passed over the influence line for Beam 1 to determine the static load effect.

Each year of simulation consists of 10 representative 'months' of 25 working days each (allowing for weekends and national holidays). The events corresponding to monthly-maximum static load effect are retained, for each month, for each of the 10 years of flow. This is done to minimize the number of events that are to be dynamically analysed. Thus there will be 100 critical events, corresponding to the monthly maxima, retained for analysis dynamically. The data retained for a typical critical event is presented in Table 1 (event consisting of the meeting of a 5-axle vehicle in lane D1 with a 4-axle vehicle in Lane D2).

Table 1. Typical 2-truck meeting event data file

Lane	W1 kg/100	W2 kg/100	W3 kg/100	W4 kg/100	W5 kg/100	AS1 (m)	AS2 (m)	AS3 (m)	AS4 (m)	Vel. (m/s)	Approach (m)
D2	49	80.4	46.1	46.1	-	3	5.7	1.3	-	20.2	100
D1	92.2	198.1	148.1	148.1	148.1	3.5	5.1	1.1	1.1	24.7	128.5

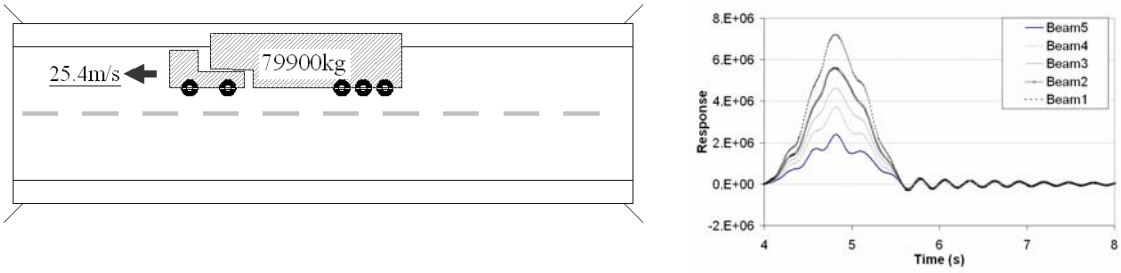

(a) 1-truck Crossing Event;

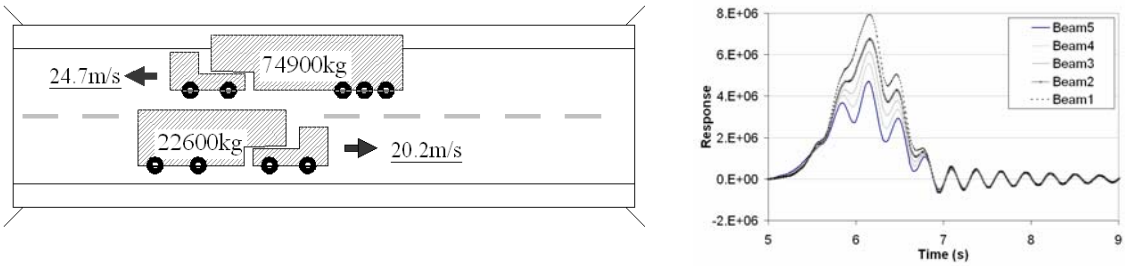

(a) 2-truck Meeting Event (described in Table 1);

Fig. 7 Examples of Monthly-Maximum Events, & Associated Total Bridge Response

The length of the vehicle approaches prior to arriving on the bridge are modified to ensure vehicles meet at the prescribed location set out by the static analysis. A minimum approach length of 100m is specified to ensure the dynamic models have achieved a suitable level of dynamic stability before crossing the bridge.
Of the 100 monthly-maximum events, 20 are found to be 1-truck events, 77 to be 2-truck events and 3 are 3-truck events. The influence surface for Beam 1 is asymmetrical; therefore trucks in Lane 1 dominate, reducing the effect of trucks in Lane D2. Hence the monthly-maximum events are derived from the occurrence of heavy trucks in Lane D1, and trucks with less extreme GVW in Lane 2, as can be seen in Table 1. Fig.7 illustrates some examples of the monthly-maximum events; the prevalence of heavy trucks in Lane D1 is again evident.

Each of the 100 cases is individually modelled and simulated using MSC/NASTRAN and the Finite element models described previously. From the generated responses it is possible to obtain the maximum total load effect in Beam 1, for each individual loading event.

RESULTS OF DYNAMIC SIMULATIONS

The results from the finite element simulations of the 100 events are presented in Fig. 8 below. The results are ranked by maximum static stress, and as such maximum static response-rank relationship is approximately linear. The respective dynamic/total response is also plotted and demonstrates the variability that results in the dynamic analysis.

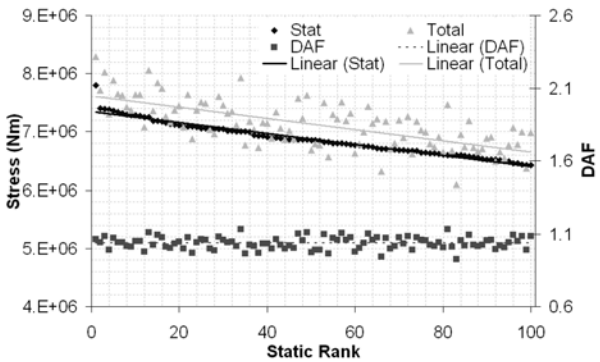

Fig. 8 Ranking of Events by Max. Static Response, with Respective Total Response and DAF

Bridge DAF is calculated using Eq. 1 and is also visible in Fig. 8. It is apparent that although DAF values of magnitude 1.3 to 1.5 may be obtained for the chosen bridge, these high order DAF values are not evident in the analysis of the bridges critical loading events. Despite the limited number of data points a distribution for DAF is evident (Fig. 10), and may be approximated to a normal distribution. (Note this distribution is the distribution of DAF in critical events only)

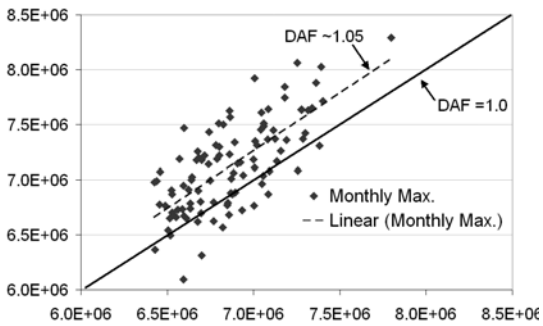

Fig. 9 Correlation between Maximum Static stress and Maximum Total stress

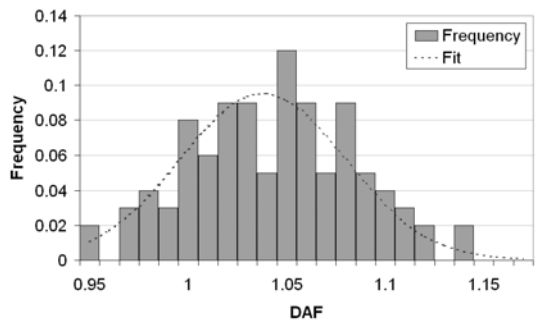

Fig. 10 Histogram of DAF for 100 Critical Events

For the recorded data statistical investigation yields a mean DAF value of 1.035, with a standard deviation of 0.041. The characteristic DAF for the chosen 10-year sample period is calculated, using Eq.2 as being 1.0635. This value of characteristic DAF can be extrapolated to the 1 in 1000 year characteristic DAF using multivariate extreme value analysis, and results in a bridge specific characteristic DAF of 1.06, which is considerably less than that values specified in current design codes for similar bridges.

CONCLUSIONS

In this paper, the current means of allowance for dynamic interaction of bridge and truck(s) is reviewed and shown to be conservative. Monte Carlo simulation of static load effect is used to obtain monthly maximum loading events, which are then modelled and analysed dynamically using NASTRAN to obtain the total load effect. It is shown that by individually assessing the dynamic response due to critical loading a more bridge specific value of DAF can be obtained. Further statistical analysis of the results outlined can be used to develop the 1 in 1000 year total bending moment, and thus the characteristic 1 in 1000year bridge specific DAF.

Acknowledgments

The authors wish to acknowledge the continued financial assistance provided by the Irish Research Council for Science, Engineering and Technology (Embark Initiative).

References

1. Gonzalez, A. O'Connor, A.J., O'Brien, E.J., An Assessment of the Influence of Dynamic Interaction Modelling on Predicted Characteristic Load Effects in Bridges, Proceedings of the 3rd International Conference on Current and Future Trends in Bridge Design, Construction and Maintenance, Shanghai, China, 2003, pp. 241-249.
2. Caprani, C.C., OBrien, E.J., The Prediction of the Distributions of Extreme Load Effects on Bridges, Probabilistic Engineering Mechanics, 2006, under review.
3. O'Connor, A.J., Probabilistic Traffic Load Modelling for Highway Bridges, Ph.D. Thesis, Dept. of Civil Engineering, Trinity College Dublin, Ireland, 2001.
4. Grave, S.A.J., Modelling of Site-Specific Traffic Loading on Short to Medium Span Bridges, PhD Thesis, Dept. of Civil Engineering, Trinity College Dublin, 2001.
5. Green, M.F., Cebon, D., Dynamic Interaction between Heavy Vehicles and Highway Bridges, Computers and Structures, Vol.62, No.2, 1995, pp.253-264.
6. Brady, S.P., OBrien, E.J. and Žnidarič, A., The Effect of Vehicle Velocity on the Dynamic Amplification of a Vehicle crossing a Simply Supported Bridge, Journal of Bridge Engineering, Vol.11, No.2, 2006, pp. 241-249.
7. Li, Y., Factors affecting the Dynamic Interaction of Bridges and Vehicle Loads. PhD Thesis, University College Dublin, Ireland, 2006.
8. Cai, C.S. and Shahawy, M., Understanding Capacity Rating of Bridges From Load Tests, Practice Periodical on Structural design and Construction, A.S.C.E., 8-4, 2003, pp. 209-216.
9. Chan, T.H. & O'Connor, C. Vehicle Model for Highway Bridge Impact, Journal of structural Engineering, Vol.116, No.7, 1990, pp.1772-1793.
10. Zhang, Q-L., Vrouwenvelder, A., Wardenier, J., Dynamic amplification factors and EUDL of bridges under random traffic flows, Journal of Engineering structures, Vol. 23, 2000, pp. 663-672.
11. Huang, D., Wang, T., Shahawy, M., Impact Studies of Multigirder Concrete Bridges, Journal of Structural Engineering, Vol. 119, No.8, 1993, pp 2387-2402.
12. Kwasniewski, L., Li, H., Wekezer, J., Malachowski, J. Finite element analysis of vehicle-bridge interaction, Finite Elements in Analysis and Design, Vol. 42 No.11, 2006, pp. 950-959.
13. Kirkegaard, P.H., Nielson, S.R.K., Enevoldson, I. Heavy Vehicles on Minor Highway Bridges–Dynamic Modelling of Vehicles and Bridges, Department of Building technology and Structural Engineering, Aalborg University, 1997, ISSN 1395-7953 R9721.