Dublin Institute of Technology
ARROW@DIT

Conference papers

School of Electrical and Electronic Engineering

2008-01-01

Effects of Klopfenstein Tapered Feedlines on the Frequency-and-time Domain Performance of Planar Monopole UWB Antennas

Giuseppe Ruvio
Dublin Institute of Technology

Max Ammann
Dublin Institute of Technology, max.ammann@dit.ie

Follow this and additional works at: http://arrow.dit.ie/engschececon

Part of the Electrical and Computer Engineering Commons

Recommended Citation
Ruvio, G. & Ammann, M. (2008) Effects of Klopfenstein tapered feedlines on the frequency- and - time domain performance of planar monopole UWB antennas. *IEEE Antennas and Propagation Society International Symposium*,pp.1-4. San Diego, California, 5-11 July, 2008.

This Conference Paper is brought to you for free and open access by the School of Electrical and Electronic Engineering at ARROW@DIT. It has been accepted for inclusion in Conference papers by an authorized administrator of ARROW@DIT. For more information, please contact yvonne.desmond@dit.ie, arrow.admin@dit.ie.

Effects of Klopfenstein Tapered Feedlines on the Frequency- and Time-domain Performance of Planar Monopole UWB Antennas

G. Ruvio and M. J. Ammann
Centre for Telecommunications Value-chain Research
Antennas and High Frequency Research Group
Dublin Institute of Technology
Kevin Street, Dublin 8, Ireland
E-mail: giuseppe.ruvio@student.dit.ie

Introduction

When in 2002 the Federal Communications Commission (FCC) released the unlicensed use of Ultrawide Band (UWB) communications over the frequency range of 3.1-10.6 GHz, this technology was expected to be the next-generation technology for short-range, high-speed wireless communications. This very broad operating bandwidth allows the propagation of extremely short pulses of the order of picoseconds pulse width. For pulse-based UWB systems, linear phase, impedance and gain responses are usually required in order to cover the entire operating bandwidth or just the portion where the majority of the pulse energy is distributed. For that reason, the design of a good UWB antenna for pulse-based systems has to provide a linear phase variation with frequency over the whole operating bandwidth. This particular feature is very challenging considering the extremely large bandwidth over which it is required together with steady directional or omnidirectional radiation patterns, constant gain along desired direction(s), consistent polarization, mobility with small size/low profile, low design complexity and low material/manufacturing cost. In this paper we focus on those characteristics specially requested for antennas dedicated to pulse-based UWB technologies. In particular, a Klopfenstein tapered feedline [1] will be introduced in order to modify the mode distribution into a planar monopole UWB antenna under test. By tapering the feedline of the antenna according to a Klopfenstein distribution, multiple resonances occurring within the operating bandwidth can be controlled. A Klopfenstein tapered feedline can gradually match two different resistive terminations in order to reduce reflected waves and maximize the power transferred to a generic load. The impedance condition at the interface between feedline and antenna is a complex function of frequency. However, in this paper a Klopfenstein tapered feedline is demonstrated to be a valid tool to control the depth of resonances of the antenna in order to mitigate phase distortion. On the other hand, as the depth of resonances is decreased to mitigate phase distortion, the overall impedance bandwidth may be reduced, so that a compromise between impedance bandwidth and time-domain response is pursued. In this paper, Klopfenstein tapered feedlines have been compared in terms of the resulting phase linearity and group delay of the antenna under test when the load impedance condition and the taper length are tuned. Numerical analysis for the different structures investigated was carried out using the finite integration time domain method, CST Microwave Studio.

Design of the antenna under test

The planar monopole antenna used as reference for our investigation is a very well-known planar monopole printed on 1.6mm thick FR4 dielectric slab with a microstrip

978-1-4244-2042-1/08/$25.00 ©2008 IEEE

Authorized licensed use limited to: DUBLIN INSTITUTE OF TECHNOLOGY. Downloaded on April 24, 2009 at 10:10 from IEEE Xplore. Restrictions apply.

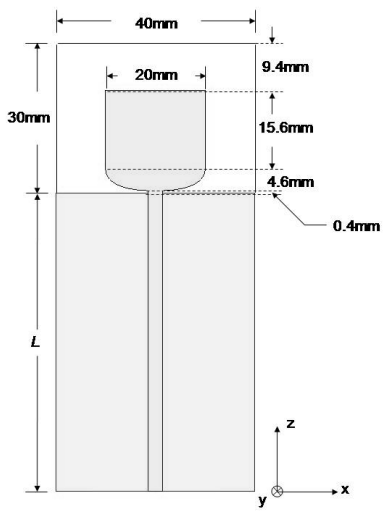

Fig. 1 Geometry of the planar monopole antenna used as reference.

feed arrangement (Fig. 1). Thanks to the groundplane being in the same plane as the monopole plate, this antenna is one of the most compact solutions for broadband antennas. Additionally, this structure presents very simple manufacturability and reduced costs. Beveling the bottom edge of the antenna has been demonstrated to be an effective way to increase the upper edge (10 dB RL) frequency, thus increasing the overall impedance bandwidth [2]. This symmetrical bevel was realized by shaping the bottom border of the radiator according to a quadratic Bézier curve with *knots* in the points (-10, L + 5mm), (0, L + 0.4mm) and (10, L + 5mm) on the *xz* plane. The quadratic Bézier curve is the path traced by the function $B(t) = (1-t)^2 P_0 + 2t(1-t)P_1 + t^2 P_2$ given the points $\mathbf{P_0}$, $\mathbf{P_1}$ and $\mathbf{P_2}$ and $t \in [0,1]$. This particular spline is an available tool to create shapes in CST Microwave Studio and it has been demonstrated to be a valid technique to smooth the shape of broadband radiators and improve impedance bandwidth and phase response performance [3]. In our particular case the spline-based symmetrical bevel smoothes the edges that a straight bevel would introduce, so that a possible source of phase distortion is eliminated from the radiating element. Moreover, with this geometry it is simpler to combine a tapered feedline to the monopole, since the bottom edge of the antenna is flatter.

Klopfenstein tapered feedline

The Klopfenstein tapering technique is derived from a stepped Chebyshev transformer as the number of sections increases to infinity and it has been shown to be optimum in terms of the trade-off minimum reflection coefficient/shortest matching section [1]. In our case, the Klopfenstein taper has been calculated in order to match the input 50 Ω to the impedance at the connection with the radiating element. This impedance transformation has been designed across a taper length L (35, 40, 45, 50 or 55 mm). The maximum ripple of the input reflection coefficient Γ_M used is 0.01. By numerical simulation, the resistance calculated at the interface between the feedline and the radiating element is approximately 24 Ω at 6.85 GHz. However, matching the 24 Ω impedance condition at the interface between feedline and antenna introduces modes propagating from the taper into the antenna that can significantly reduce the operating bandwidth on the antenna. In fact, in order to realize a 24 Ω impedance condition, the microstrip must be 8.199 mm wide. This width is larger than λ/4 (in medium) at 6.85 GHz, which means that transversal modes (to the direction of desired propagation *z*) take place reducing the power transferred to the antenna and, in other words, the impedance bandwidth. In order to solve this problem, different terminal load conditions have been investigated both in terms of impedance bandwidth and phase response. In particular, together with the 24 Ω condition, terminations matched to 28, 30, 32 and 35 Ω have been numerically evaluated and compared (Fig. 2) while the taper length L = 50 mm has been kept constant. A compromise between linear phase response and broad impedance bandwidth has been investigated. The impedance bandwidth appears to be significantly reduced as the taper is

Authorized licensed use limited to: DUBLIN INSTITUTE OF TECHNOLOGY. Downloaded on April 24, 2009 at 10:10 from IEEE Xplore. Restrictions apply.

introduced and, on the other hand, the phase of S_{11} becomes smoother as the depth of the resonances is radically reduced. For this tapering solution, the best compromise between impedance bandwidth and phase response is obtained for Z_L = 30 Ω. In the aim of obtaining the best compromise between compactness and performance, an analysis of the antenna under test with Klopfenstein tapered feedline matched to 30 Ω has been carried on for 5 different values of L (35, 40, 45, 50 and 55 mm). In Figure 3, the effect of tuning the taper length L is illustrated in terms of magnitude and phase of the return loss and group delay.

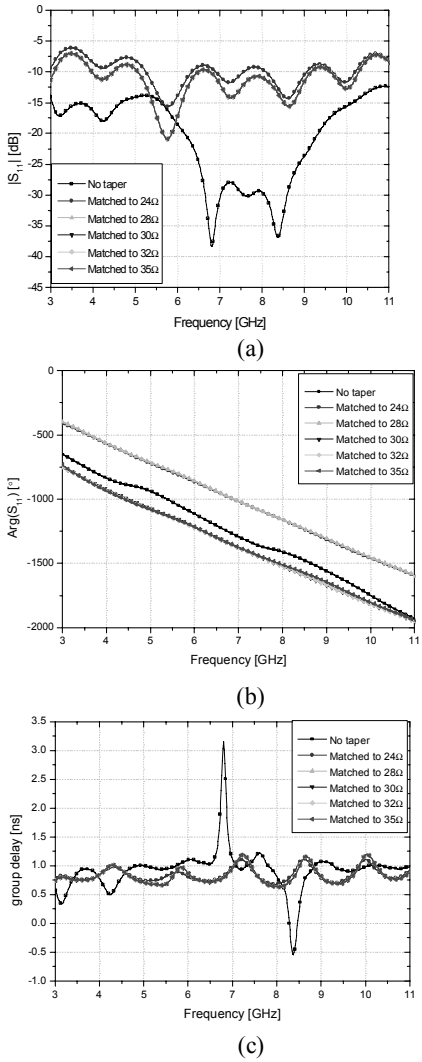

Fig. 2 Comparison of different load impedance solutions with Klopfenstein taper. (a) Impedance bandwidth; (b) Phase-response; (c) Group delay.

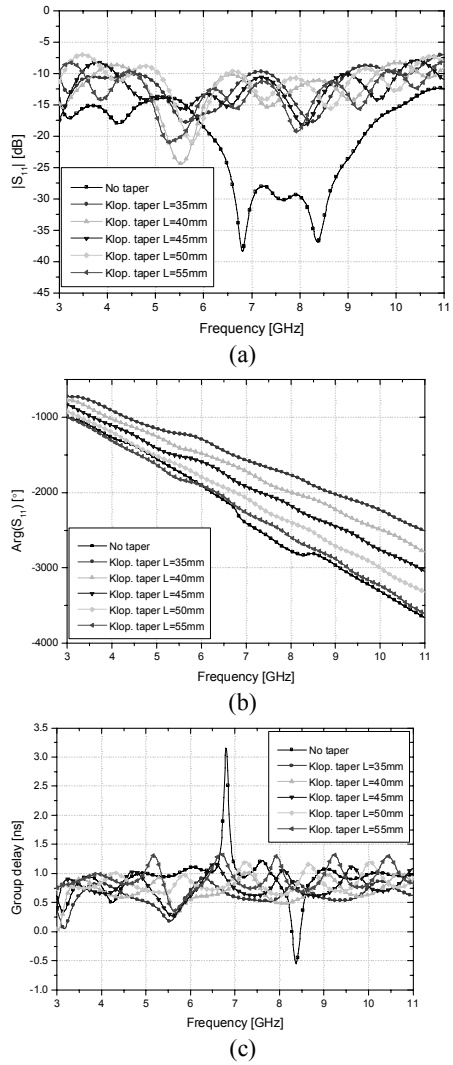

Fig. 3 Comparison of different taper length L (a) Impedance bandwidth; (b) Phase-response; (c) Group delay.

From Figure 3, we can observe that the best solution in terms of impedance bandwidth and phase-linearity is obtained for L = 50 mm. For this value the group delay variation is equal to 0.555 ns across the FCC UWB bandwidth, which is drastically reduced compared to 3.723 ns for the non-tapered antenna (an 85% reduction). In terms of radiation properties, tapering the feedline in the fashion described above does not introduce major changes. Fig. 4 shows the radiation

Authorized licensed use limited to: DUBLIN INSTITUTE OF TECHNOLOGY. Downloaded on April 24, 2009 at 10:10 from IEEE Xplore. Restrictions apply.

patterns of the non-tapered and the Klopfenstein tapered antenna when matched to Z_L = 30 Ω and L = 50 mm at 6.85 GHz. In the principal cuts, the radiation patterns are very similar. The same behavior can be observed across the entire operating bandwidth.

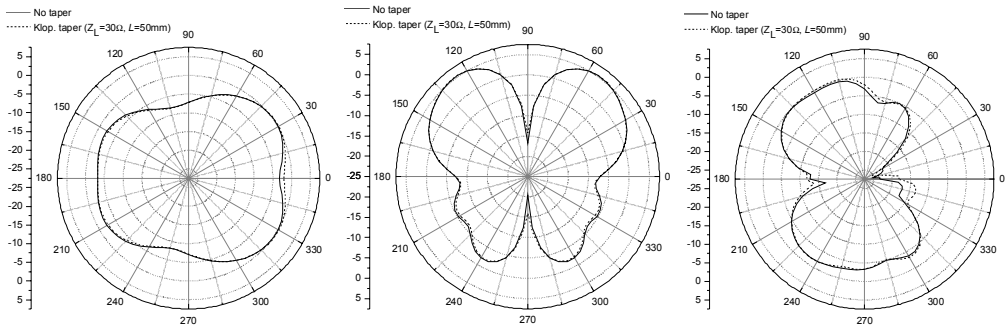

(a) (b) (c)

Fig. 4 Simulated radiation patterns of the non-tapered and the Klopfenstein tapered antenna. (a) *xy*-plane (b) *xz*-plane (c) *yz*-plane.

Conclusion

The effects of a Klopfenstein tapered transmission line used to feed a typical planar monopole UWB antenna have been investigated in terms of impedance bandwidth, phase linearity and radiation properties. The analysis shows that the taper allows manipulation of the resonances occurring within the operating bandwidth. A Klopfenstein tapered feedline that matches the 50 Ω input impedance to 30 Ω along 50 mm is able to reduce the maximum group delay variation by 85% with an acceptable variation of the impedance bandwidth and minor changes in the radiation pattern.

Acknowledgement

This work was supported by Science Foundation Ireland.

References:

[1] R. W. Klopfenstein, A Transmission Line of Improved Design, *Proceedings of the I. R. E.*, pp. 31-35, 1956.

[2] M. J. Ammann, Control of impedance bandwidth of wideband planar monopole antennas using a beveling technique, *Microw. Opt. Technol. Lett.*, vol. 30, no. 4, pp. 229-232, Jul. 2001.

[3] L. Lizzi, F. Viani, R. Azaro and A. Massa, Optimization of a Spline-Shaped UWB Antenna by PSO, *IEEE Antennas and Wireless Propag. Letters*, vol. 6, pp. 182-185, 2007.

[4] M. John, M. J. Ammann, Spline Based Geometry for Printed Monopole Antennas, *Electronics Letters*, vol. 43, no. 6: The Institution of Electrical Engineers, pp. 317-319, March 2007.

Authorized licensed use limited to: DUBLIN INSTITUTE OF TECHNOLOGY. Downloaded on April 24, 2009 at 10:10 from IEEE Xplore. Restrictions apply.