Dublin Institute of Technology
ARROW@DIT

Conference papers

School of Accounting and Finance

2010-01-01

The Global Financial Crisis: World Market or Regional Contagion Effects?

Lucia Morales
Dublin Institute of Technology, lucia.morales@dit.ie

Bernadette Andreosso-O'Callaghan
University of Limerick, bernadette.andreosso@ul.ie

Follow this and additional works at: http://arrow.dit.ie/buschaccon

Part of the Finance and Financial Management Commons

Recommended Citation

Morales, L., Andreosso-O'Callaghan, B.: The Global Financial Crisis: World Market or Regional Contagion Effects?MFA (Midwest Finance Association) Annual Meeting, February 24th-27th February, 2010, Las Vegas, Nevada, USA.

This Conference Paper is brought to you for free and open access by the School of Accounting and Finance at ARROW@DIT. It has been accepted for inclusion in Conference papers by an authorized administrator of ARROW@DIT. For more information, please contact yvonne.desmond@dit.ie, arrow.admin@dit.ie.

This work is licensed under a Creative Commons Attribution-Noncommercial-Share Alike 3.0 License

The Global Financial Crisis: World Market or Regional Contagion Effects?

Authors: Bernadette Andreosso-O'Callaghan, University of Limerick[1]
Lucía Morales, Dublin Institute of Technology, Dublin[2].

Keywords: Stock Returns, GARCH modeling, Contagion, Interdependence, Volatility Spillovers.

JEL Codes: F, G

Abstract

In the last two decades, the world economy has been challenged by different economic and financial crisis. These events have captured researchers' attention, and in particular the analysis of contagion effects derived from stock market shocks have been a focal point of interesting discussions. However, there is little consensus on how contagion should be defined and indentified. Consequently, this paper contributes to the already settled debate on the area proposing the analysis of contagion effects in a worldwide framework, where three different econometric models to test for contagion are being used. The main results are in line with most of the existing literature analysing this topic, and our results do not find strong evidence supporting contagion effects derived from the US stock markets, neither in a worldwide nor in a regional form. Hence, these findings bring evidence that there is still a lot of work to be done on how to define contagion, and even more so, on how to measure it.

[1] Bernadette Andreosso-O'Callaghan: bernadette.andreosso@ul.ie; Department of Economics and Euro-Asia Centre, Kemmy Business School. University of Limerick, Ireland.

[2] Lucía Morales: lucia.morales@dit.ie; Department of Accounting and Finance, Business School, Dublin Institute of Technology, Ireland.

1. Introduction

What began as a bursting of the US housing market bubble and as a rise in foreclosures, ballooned subsequently into a global financial crisis. The world has been a witness on how some of the largest and most established banks, investment houses, and insurance companies have either declared bankruptcy or have had to be rescued financially. In October 2008, credit flows froze, lender confidence dropped, and one after another the economies of countries around the world dipped towards recession (Nanto *et.al*, 2008). As a consequence, many analysts started to compare the current economic downturn to the market crash of 1929. The US subprime housing market started its downward trend at the end of 2007, and Lehman Brothers declaration for bankruptcy the 15 of September 2008, caused a dramatic effect on the US stock markets that rapidly spread to rest of the world. As a consequence, many economic researchers and experts started to raise their voices talking about global contagion effects. The US economy was and is still facing very difficult times, and due to the fact that its financial system is nationally and internationally interconnected, it did not take longer until the effects spread to the rest of the financial markets and world economies causing downward spiralling effects. As a result, the initial mortgage crisis derived into what started to be called the "great recession" and which unfolded dramatic economic changes in the world major equity markets.

Considering that the world economies, and especially their financial systems are at different levels of development, it is intriguing to know and understand the real extension of the current financial turmoil, and how it is affecting the world economies. Moreover, it is really important to study and analyse if it is appropriate to be talking about contagion effects across the world markets, or whether what happened were simply spillover effects derived from interlinkages across markets. In this regard, we consider of relevance to conduct an analysis that focuses its attention in investigating the major impact of the financial turmoil under a world market and regional perspective, where the main emphasis will be devoted to emerging economies in Asia and Latin America, as these regions were showing a great developing potential during the past decade. Therefore, we posit that these countries will be key players in the world economic recovery process and indeed that they will be seen as areas where to allocate capital in the future.

During times of economic distress, shocks occurring in a stock market can be transmitted among world equity markets, a situation that is commonly known as "contagion". The main question in these cases is to know, how, and to which extent, contagion effects will spread across the world equity markets, and more importantly to understand if there are major differences in relation to a regional *versus* a world market impact. As a consequence, our main hypothesis is that the current financial crisis ought to be differentiated from past events, in that developed economies could be suffering to a larger extent from contagion effects than would be the case in some key emerging economies. Previous evidence has shown indeed that in the case of crises (e.g. the 1994 Mexican crisis, the 1997 Asian financial crisis, the 1998 Russian crisis, the 1999 Brazilian crisis, the 2001 Argentinean crisis, and the 2002 Turkish crisis), developed economies managed to be relatively insulated from contagion effects.

Several definitions of the term 'contagion' have been proposed, there is no unanimously agreed definition of the term, and there is a high controversy in the literature regarding definitions and methodologies developed to measure contagion effects across world economies.

If the world economy was suffering from real contagion effects, the recovery process would be long and painful for all economies, as the whole economy would be involved in a dramatic economic situation. Yet, countries with relatively solid and healthy financial institutions are starting to show signs of recovery. In this regard, emerging economies will follow the path, as the main problem that they are facing is coming for their trade account. When the developed markets started being hit by the financial turmoil, the majority of the emerging economies' situation started to deteriorate since a lot of their growth depends on exports to the markets of the developed economies. On the other hand and in the case of African countries, where one of the main sources of income are by means of FDI, financial aid, and remittances, it is clear again that these economies are under a situation of distress. The African region might suffer contagion effects, through the lack of external financing and funds. As a result, we can see with clarity that the US financial crisis did spread around the world, but not in a way that could be considered as contagion (as many of the countries did not share the same problems and patterns that the US economy was presenting).

As a result, although it is significant in many developed economies, to what extent is the financial crisis affecting the emerging economies, in particular the ones located in Asia and Latin America? Is there any difference between these regions and what is happening with regard to Eastern Europe and Russia? Is it possible to talk about differences between regions, and to identify with clarity which emerging economies would be able to recover faster? The analysis proposed here intends to look at contagion effects among the world equity markets, with a special attention to Asia and Latin America, where international turbulences have affected these regions to a lower extent. The severity of the impact of the financial crisis on different world economies seems to be directly connected with the level of integration of their financial markets.

The major contribution of this paper to the existing literature can be summarised as follows: first, it analyses a wide range of equity markets (58 stock markets) with the objective of identifying contagion effects originating in the US equity markets (Dow Jones Industrials and S&P500). Second, a comparative analysis is undertaken where the world equity markets are divided into different regions (developed and emerging financial markets) in order to identify possible divergence in terms of behavioural patterns; in doing this, we will use the G-20 classification as our point of reference.

The existing research argues that financial markets are becoming increasingly integrated. In our view this statement has to be considered carefully, as this integration process can not be generalised to the world economy. Indeed, there are economies that have experienced a high level of development, and as a consequence, their interaction and interlinkages with the rest of the world economies has gained in importance; however, there are also economies that have advanced very slowly in this regard. This differentiation is important in order to identify how the current financial crisis is having different effects around the world. Considering that the US economy is have a great influence in most of the world economies that can potentially be affected by a decline suffered in the US economy, it is important to analyse if the current financial downturn is really generating contagious effects, or whether it is just a matter of spillover effects.

Much of the empirical literature on financial crises still focuses on country-specific macroeconomic factors; it has ignored or at least it has underestimated the importance of contagion –the possibility that the origin of a crisis may lie in the occurrence of a crisis elsewhere in the world rather than because of weak economic fundamentals (Fratzscher, 2000). Following this line of thinking, we also intend to bring some discussion in relation

to what is know as contagion in economics and finance, and to open a line of thought that would allow to better define what can be considered as contagion.

The remainder of this paper is organised as follows. Section 2 proposes some definitions of contagion and discusses some of the literature dealing with contagion issues. Section 3 presents the data and econometric modelling used to analysed contagion in the current financial environment. Section 4 examines and discusses the results obtained after implementing appropriate econometric techniques in testing for contagion and the worldwide effects caused by the current financial crisis. Finally section 5 concludes the analysis offering a summary and notes for further research.

2. Financial Market Crises and Contagion Background

There is a vast literature dedicated to analyse how shocks propagate internationally, but surprisingly there is little agreement among researchers in the area when looking for a formal definition of what actually constitutes contagion.

The World Bank defines contagion as follows:

> "*Contagion is the transmission of shocks to other countries or the cross-country correlation, beyond any fundamental link among the countries and beyond common shocks. This definition is usually referred as excess co-movement, commonly explained by herding behaviour.*"

A more restrictive definition states:

> *"Contagion occurs when cross-country correlations increase during "crisis times" relative to correlations during "tranquil times."*

According to Dornbusch and Claessens (2000):

> "*Contagion is a significant increase in cross-market linkages after a shock to an individual country (or group of countries), as measured by the degree to which asset prices or financial flows move together across markets relative to this co-movement in tranquil times*".

Forbes and Rigobon (2002) use the term *"shift-contagion",* a term which is more sensible than other terms, because it not only clarifies that contagion arises from a shift in cross-market linkages, but also it avoids taking a stance on how the shift occurred. Cross market linkages can be measured by a number of different statistics, such as the correlation in asset returns, the probability of a speculative attack, and the transmission of shocks or volatility. This definition implies that if two markets are highly correlated after a shock,

this is not necessarily contagion. It is only shift-contagion if the correlation between the two markets increases significantly. This definition is of key importance for the proposed research, as we are analysing contagion effects derived from the US equity markets. Since the US economy is a driving force for the rest of the world, and due to the fact of its high level of influence on the rest of the economies, it might be that the US financial crisis did not generate contagious effects, but rather spillover effects, as this economy is highly interlinked with the rest of the world.

The definition of contagion provided by investorswords.com describes contagion as a situation: "*When an economic crisis in one country's bond or equity markets spreads to other countries which experience the same problems. The term comes from the more general definition of contagion, which is a highly transmittable disease*".

Analysing this definition, it is quite interesting to note that contagion is considered as highly transmittable, but more importantly that it derives from an original situation that is transmitted to other countries or markets. This is a striking statement, and makes us wonder, if contagion is being appropriately used by researchers and experts when talking about economic and financial spillover effects. If we consider with care the fact, that to be considered as a contagious effect the markets affected should be experiencing the same problems that the original country is presenting, the most important question that arises is: can it be said that the current financial crisis derived into global contagion effects? In order to answer this question it is necessary to identify country A (where the crisis has its origins), and what are the major problems presented by that economy. In this case it is well-known that the financial turmoil has its origins in the US financial system, and in particular in the subprime market, the collapse of which spread over the whole American financial institutions, what was translated by investors in the stocks markets. The next step is to identify a country B (the country that is suffering from contagion effects). If we posit that market contagion happens only when the affected country or countries suffer from the same problems as the origin country, the definition of contagion as related to the case of the current crisis starts to tumble. If we look at the developed economies, it is quite clear that many of them did not suffer from the same problems as the USA; for example, we find that the Canadian financial system does not present any similarities with the US one; in Europe, countries like France, Spain, Italy, Switzerland, Sweden, etc, do not present any resemblance to the US financial system. In the case of the African economies, the situation is even clearer, as these countries did not share any common element regarding the

subprime market. The same patterns are appreciated when looking at the Asian and Latin American economies. Therefore, it is appropriate to be talking about contagion effects among these regions?

We can therefore cast serious doubts as to the definition of contagion proposed in the literature. It is our opinion that the definition of contagion should not be so restrictive, and that there is a need to take into consideration financial as well as macroeconomic fundamentals and their impact in terms of contagion effects.

By using a very restrictive definition of contagion, a large number of studies have attempted to measure these supposedly contagion effects, through a number of techniques. For example, Bordo and Panini (2000) examine the evidence of contagion during the pre World War I era, and during the interwar and contrast their findings with the evidence of contagion from the crises in Asia and Latin America. Using weekly data on bond prices and interest rates, they investigate the extent to which bilateral cross-market correlations rise following the onset of a crisis. After correcting for heteroscedasticity, *à la* Forbes and Rigobon (1999), they find little evidence of significant increases in cross-market correlations in either the earlier regimes or in the more recent period.

Fratzscher (2000) conducts three complementary tests on the relative importance of fundamentals, contagion and sunspots. First, he uses a Markov-switching model that reveals how country-specific fundamentals generally fail to explain the timing as well as the severity of financial crisis in individual countries. Including contagion in the model improves the explanatory power of the estimation significantly, even if in most of the cases it eliminates the need for regime shifts in the Markov-switching framework for some countries. A panel data analysis confirms the robustness of these results for a sample of 24 open emerging markets. The results suggest that the Latin American crisis in 1994-1995, and the Asian crisis of 1997 spread across emerging markets not primarily due to the weakness of those countries' fundamentals but rather to a high degree of financial interdependence among affected economies.

Khalid and Kawai (2003) studied three financial market variables (foreign exchange rates, stock market prices and interest rates) to trace the origin and the subsequent path of the contagion effect during 1997 Asian crisis. They used a sample of nine East Asian countries, including Japan, to construct a VAR model employing daily observations for empirical estimations. Interlinkages among different markets and different countries within

the Asian region are analysed using Granger causality. The empirical evidence does not find strong support for contagion.

Taketa's (2004) findings show that a currency crisis can spread from one country to another even when the countries are unrelated in terms of economic fundamentals. He stated that the propagation mechanism lies in each speculator's private information about his/her own type and learning behaviour about other speculators' types. Since the payoff of each speculator depends on the behaviour of other speculator as determined by their types, each speculator's behaviour depends on his/her belief about other speculators' types. If a crisis in one country reveals the speculator types, it lead to a revision of each speculator's beliefs about other speculators' types and therefore a change in his/her optimal behaviour, which in turn can cause a crisis even in another unrelated country. He also find that the better the economic fundamentals in the country where the crisis originates, the more contagious the original crisis can be.

Bekaert, Harvey and Ng (2005) use an asset pricing approach, which directly models the shock and correlation structure using crisis and non-crisis periods for identification. They present a two-factor asset pricing model and define contagion as correlation among the model residuals. Indeed, increased return correlation between two countries during a period of crisis could simply be the consequence of their exposure to a common factor. That is, it is necessary to undo the natural changes in correlation that results from an asset pricing model, before making statements about contagion. Their framework allows for time-varying expected returns as well as time-varying risk loadings for the countries under study. The results suggest that there is no evidence of additional contagion caused by the Mexican crisis. However, they find economically meaningful increases in residual correlation, especially in Asia, during the Asian crisis.

Randhawa and Low Mei (2005) analyse issues of the existence of contagion, and the changes in transmission mechanisms across time, using the augmented model employed by Dungey *et al*. (2002) to include the possibility of contagion across the Latin American, Asian and Russian credit markets. Their major findings show that the world factor explains most of the volatility experienced by various emerging credit markets, being largely due to the fact that the emerging countries studied were open economies. Given the strong influence of global factors, their results show that the global factors contribute most to total volatility experienced by emerging credit markets.

Khalid and Rajaguru (2006) study and trace the alleged origin, and the subsequent path of the currency contagion using data from a sample of selected Asian countries. For

empirical estimation they use high frequency data (daily observation) on exchange rates from 1994 to 2002. They split the sample into four periods (full, pre-crisis, crisis, and post-crisis periods), construct a multivariate GARCH model and apply Granger causality test to identify the interlinkages among exchange rate markets in selected Asian countries. The evidence suggests that currency links increased during and after the crisis. However, they found weak support for contagion in the pre-crisis period.

Balit (2007) analyse the Asian currency crisis by looking into the extent to which it affected 32 nations in three different regions of the globe. The study shows important evidence that the presence of strong legal institutions matters in reducing panic, and thus in reducing the severity and spread of financial crises. Thus, it is important for countries to build the right institutions that will increase law and order and decrease the level of corruption. Although the presence of strong institutions does not prevent a financial crisis, it will reduce the severity of crises and their contagious effect by reducing panic.

Bowman, Chan and Comer (2007) examined the reaction of major world equity markets to the 1997 Asian crisis, finding that the correlations among world equity markets increased dramatically during the period of the Asian economic crisis, but only during a short period around the crisis. They also provided evidence that the correlations among world equity markets are increasing over time, a finding consistent with financial market integration. The authors document the impact of the Asian crisis on the correlation of returns across countries, as this is important to assess the benefits of international diversification. They found that the correlations among world equity markets increased dramatically during the period of the Asian crisis. Their finding also showed that emerging countries' stock markets were the worst impacted by the Asian crisis.

Lee et al. (2007) examine whether the South-East Asian Tsunami of 2004, as an external and unpredictable shock, influenced the stability of the correlation structure in international stock and foreign exchange markets. Heteroskedasticity biases based on correlation coefficients are used to test for the contagion effects, across 26 economies. The results indicate that no international stock market suffered contagion; however five (India, Philippines, Hong Kong, Mexico and Argentina) and three (India, Philippines, Hong Kong) international foreign exchange markets displayed contagion for one to three months after the South-East Asian Tsunami of 2004, respectively. An important result is that contagion effects are more obvious in developing financial markets than those of developed ones.

Caporale *et al*. (2009) examine volatility spillovers from mature to emerging stock markets and test for changes in the transmission mechanism -contagion- during turbulences

in mature markets. Tri-variate GARCH-BEKK models of returns in global (mature), regional and local markets are estimated for 41 emerging market economies, with a dummy variable capturing parameter shifts during turbulent episodes. LR tests suggest that mature markets influence conditional variances in many emerging markets. Moreover, spillover parameters change during turbulent episodes. Conditional variances in most emerging markets rise during these episodes, but there is only limited evidence of shifts in conditional correlations between mature and emerging markets.

Malik and Ewing (2009) argue that the increasing integration of major financial markets has generated a good deal of interest in understanding the volatility spillover effects from one market to another. Two lines of thinking have developed as to why these spillovers exist. First, volatility spillovers may result from cross-market hedging and changes in common information, which may simultaneously alter expectations across markets. A second reason given to explain the mean and volatility spillover effect is that of financial contagion, specifically, a shock to one country's financial market.

It can be seen, from this brief literature review, that overall there is weak evidence supporting the idea of contagion effects in financial markets. Also, and according to the literature, contagion is only a matter of concern for emerging countries. This is in sharp contrast with what is happening at the moment. This allows us to point out the inappropriate definition of contagion in these studies, as the current definition is loose and is suffering from the omission of relevant variables that should be considered in order to formulate a more appropriate description of what should be considered as contagion.

Moreover, the existing research analysing contagion effects across markets tends to use the concept of contagion as measured by correlation coefficients among stock markets. There is a clear omission of economic and financial linkages that could be influencing market connections. Thus again the main question that arises is the following: is it possible to talk about contagion effects that are derived solely from one particular market or variable? Would real contagion take place anyway when many of the financial and economic fundamentals of a country are affected and transmitted to the rest of the world economies? Accordingly, we suggest that the current financial turmoil is characterised by spillover effects derived from the high level of interlinkages that exist among countries that belong to a particular region, and their connection with the leading world market (the USA).

3. Data and Estimation Techniques

3.1 Data Description

The data employed in this analysis covers a wide range of world equity markets; a total of 58 countries are aggregated under regional classification patterns. The study focuses on the analysis of correlation and contagion effects, where the US stock markets are considered as the source of contagion. Consequently, the world economies are divided into four main regions: America, Europe, Asia and Africa, where stock markets are organised in six main sub-regions (African markets, Asian markets, Middle East markets, American markets, Eastern European markets and European markets). Daily adjusted stock price data was obtained for each country, and the data source was DataStream. A full list of all countries and their respective stock market indices is outlined in the Appendix[3]. The period under analysis spans from January 2003 to May 2009. In order to avoid sample selection bias we decided to separate the sample in two subsamples, which will deal with the crisis and non-crisis period. Therefore, the financial crisis sample covers the period from October 2007 until May 2009[4], and the tranquil period is identified from January 2003 until September 2007.

3.2 Estimation Techniques

The methodology to be applied in the present analysis requires starting with the study of the time series properties. As a consequence, we start performing unit root tests on the three samples under study, where the standard ADF and Phillip-Perron tests are used to identify the order of integration for each series and sample period. Afterwards, it is very important to verify the ARCH effects in the original data, a test that is relevant as it will provide the necessary information to decide if the GARCH (p,q) model is the appropriate technique to conduct our contagion analysis. Once these basic tests are conducted and the properties of the time series are clearly identified, we proceed to implement the contagion analysis, that will be based on the use of three different models: i) The first model will be

[3] See section 8.1, page 30.

[4] The Chow test was implemented in the US stock markets (Dow Jones Industrials, and S&P 500), in order to identify a breakpoint, which marked the beginning of the crisis. The results show that the 15 of October of 2007 could be considered as the initial downturn in the American stock markets. Consequently, we decide to take this period as the crisis starting point for our analysis. The test is explained in the Appendix (see figure 1, page 31).

based on the Forbes and Rigobon (1999) model for contagion, ii) the second model consists in generating the time series residuals using the AR(1)-GARCH(1,1) framework on the stock market returns. We consider that the residuals obtained from the AR(1)-GARCH(1,1) model would be a good indicator of contagion effects, due to the fact that the GARCH models are a powerful tool to deal with variables that present heteroskedasticity issues. iii) the third model also considers the residuals obtained from the AR(1)-GARCH(1,1) model, but in this case the methodology is adjusted by including additional variables, that consist in the GARCH residuals obtained for each individual market belonging to the region under analysis. The main reason for doing this is to minimise the problem of omitted variables, as discussed above. We consider that in contagion analysis, many effects characterising regional markets should not be neglected, as the trade, competitive devaluation, and financial interlinkages across regional market is also a main source of shock.

3.2.1 Model 1

The initial test for contagion analysis is based on the contagion test developed by Forbes and Rigobon (2002). This model is implemented in order to obtain results that allow comparing the two proposed methodologies presented in this paper to test for contagion. The initial stages of this test consist in scaling the asset returns, and afterwards, perform the contagion test within a regression framework. This approach not only provides insights suggesting that the testing framework can be generalized, but it offers insights into its relationships with other contagion testing procedures. By testing for contagion from the asset market of country 1 (country that is considered as the source of contagion) to the asset market of country 2 (country that is affected by contagion)[5], the initial step consists in scaling the asset returns during the pre-crisis period by their respective standard deviations. This is defined with the following regression equation in terms of the scaled asset returns,

$$\left(\frac{x_{2,t}}{\sigma_{x,2}}\right) = \alpha_0 + \alpha_1\left(\frac{x_{1,t}}{\sigma_{x,1}}\right) + \eta_{x,t}\,, \tag{1}$$

[5] In this study country two will be represented by each regional stock market under study, and country one would be represented by the US stock markets that are identified as the source of contagion.

where $\eta_{x,t}$ is a disturbance term and α_0 and α_1 are regression parameters. The pre-crisis slope regression parameter is related to the pre-crisis correlation coefficient as $\alpha_1 = \rho_x$.

The following regression equation is defined for the crisis returns, except that the scaling of asset returns is still done by the respective standard deviation from the pre-crisis periods,

$$\left(\frac{y_{2,t}}{\sigma_{x,2}}\right) = \beta_0 + \beta_1\left(\frac{y_{1,t}}{\sigma_{x,1}}\right) + \eta_{y,t} \tag{2}$$

where $\eta_{y,t}$ is a disturbance term and β_0 and β_1 are regression parameters. The crisis regression slope parameter β_1 is equivalent to $\beta_1 = \upsilon_y$, which is the Forbes-Rigobon (2002) adjusted correlation coefficient given in previous equation.

Equations (1) and (2) suggest that another way to implement the Forbes-Rigobon adjusted correlation is to estimate (1) and (2) by OLS and to test the equality of the regression slope parameters (this regression approach is the one used to check for contagion effects in this paper). This test is equivalent to a Chow test for a structural break of the regression slope. The implementation of the test can be based on the following pooled regression equation over the entire sample,

$$\left(\frac{z_{2,t}}{\sigma_{x,2}}\right) = \gamma_0 + \gamma_1 d_t + \gamma_2\left(\frac{z_{1,t}}{\sigma_{x,1}}\right) + \gamma_3\left(\frac{z_{1,t}}{\sigma_{x,1}}\right)d_t + \eta_t, \tag{3}$$

where,

$z_i = (x_{i,1}, x_{i,2}, ..., x_{i,T_x}; y_{i,1} y_{i,2}, ..., y_{i,T_y})'$, i = 1,2,…, Tx,Ty represents the (Tx+Ty)x1 scaled pooled data set by stacking the pre-crisis and crisis scaled data,

d_t is a slope dummy variable defined as,

$$dt = \begin{cases} 1 : t > Tx \\ 0 : \text{otherwise} \end{cases}$$

and η_t is a disturbance term. The parameter $\gamma_3 = \beta_1 - \alpha_1$ in equation (3), captures the effect of contagion. It represents the additional contribution of information on asset returns in country 2 to the pre-crisis regression. If there is no change in the relationship, the

dummy variable provides no new additional information during the crisis period, resulting in $\gamma_3 = 0$. Thus the Forbes and Rigobon (2002) contagion test can be implemented by estimating equation (3) by OLS and performing a one-sided t-test of, $H_0 : \gamma_3 = 0$, in equation (3), which is equivalent to testing $H_0 : \alpha_1 = \beta_1$, in equation (1) and (2). Of course, the test statistic to perform the contagion test is invariant to scaling transformations of the regressors, such as the use of $\sigma_{x,1}$, and $\sigma_{x,2}$ to standardize z_t. This would suggest that an even more direct way to test for contagion would have been to implement a standard test of parameter constancy in a regression framework simply based on z_t, on unscaled data[6].

3.2.2 Model 2

Considering that Billio and Pelizzon (2003) show that the methodologies proposed by Forbes and Rigobon (2002) are highly affected by the windows used, and more importantly by the presence of omitted variables, we propose a second approach. This is the major contribution of this paper. It consists in testing for contagion using the residuals generated for a GARCH(1,1) model, where equation (3) above is adjusted to take into account these new variables, and where we introduce a multivariate technique in order to capture the effects generated by country one (represented by the Dow Jones Industrials, and S&P 500 GARCH residuals) and also, adding the residuals from the individual markets allocated to each region, in order to avoid problems of omitted variables in the specification of the model. The model will also include dummy variables to take into account the pre-crisis and crisis periods.

The presence of kurtosis and the non-normality displayed in financial returns motivates to fit GARCH (p,q) models to their study[7]. Taking this fact into consideration, and being aware that the GARCH (1,1) model frequently provides a reasonable description of financial returns, we decide that an appropriate model to test for contagion effects would be an AR(1)-GARCH(1,1) model. This model's specification is a follows:

$$SR_{i,t} = \delta_0 + \delta_1 SR_{i,t-n} + e_{i,t} \tag{4}$$

[6] Our analysis is based in using this model to estimate contagion effects.
[7] See for example: Domowitz and Hakkio (1985), Engle, Lilien and Robins (1987) and Bollerslev, Chou and Kroner (1992).

where, $e_{i,t}|I_{t-1}$ ~ N(0, h_t), and h_t is given by the variance equation:

$$h_{i,t} = \alpha_0 + \lambda_1 e_{i,t-1}^2 + \beta_1 h_{i,r-1} \tag{5}$$

where,

$SR_{i,t}$ = each stock market under analysis.

Our next step is to apply the GARCH (1,1) model, with the aim of working out the residuals for each of the stock markets under analysis, in order to include such residuals in the final contagion equation that are defined as follows:

$$\mu_{SRi,t} = \varphi_0 + \varphi_1 d_c + \theta_2 \varepsilon_{i,t-1}^{DowJones,S\&P500} d_c + \eta_t \tag{6}$$

Equation (6) provides an analysis of contagion derived from the US stock markets, where it is possible to appreciate which one of the indices is generating the stronger impact in the different world regions. This equation will be considered as model 2 in our methodology.

3.2.3 Model 3

Equations (7) and (8) below incorporate the GARCH errors per regional market. The objective is to improve the results obtained from the estimation of equation (6) in model 2, where the only impact in the markets that is considered is the one originating in the US stock markets. However, it is the authors' belief that the model requires to be adjusted to the shocks affecting and originating in the regional markets. In this way, it would be possible to determine if market volatility is affected in a higher manner by shocks generated from within the region, other than the initial hit in the US stock markets. The objective of this model is to minimise the problem of omitted variables that could affect our results; this was pointed out by Billio and Pellizon (2003) as an important source of bias.

$$\mu_{SRi,t} = \varphi_0 + \varphi_1 d_c + \varphi_2 \varepsilon_{i,t-1}^{DowJones} d_c + \varphi_3 \varepsilon_{i,t-1}^{SRR_1} + \ldots + \varphi_4 \varepsilon_{i,t-1}^{SRR_n} + \eta_t \tag{7}$$

$$\omega_{SRi,t} = \phi_0 + \phi_1 d_c + \phi_2 \varepsilon_{i,t-1}^{S\&P500} d_c + \phi_3 \varepsilon_{i,t-1}^{SRR_1} + ... + \phi_4 \varepsilon_{i,t-1}^{SRR_n} + \nu_t \quad (8)$$

.

The terms of each equation are presented as follows,

$\mu_{SRi,t}$ = residuals from the GARCH (1,1) estimation per individual country under analysis.

$\varepsilon_{i,t-1}^{DowJones,S\&P500}$ = residuals from the GARCH (1,1) for country one (USA), to capture shocks originated from the US markets, represented by the Dow Jones Industrials and S&P500.

$\varepsilon_{i,t-1}^{SRR_1} + ... + \varepsilon_{i,t-1}^{SRR_n}$ = residuals from the GARCH (1,1) for each of the regional countries, to capture shocks originating from the region, when performing a contagion analysis by location.

d_c = dummy variable that considers the crisis period.

The terms are adjusted in equation (8) in order to consider the inclusion of the S&P500 as the source of contagion; the remaining terms can be read in the same way as in equation (7).

We use the residuals generated from the GARCH (1,1) model to measure the increase in levels of correlation, to incorporate in the contagion model for country one (Dow Jones Industrials and S&P 500), and for the ??? regional analysis. An important difference between our analysis and more traditional tests, is that we are testing the error terms generated from the AR(1)-GARCH(1,1) model to check for contagious effects. In this study we are using an AR(1)-GARCH(1,1) model, considering that the GARCH models are used in order to model series that suffer from heteroskedasticity, this problem is eliminated when introducing into the analysis the residuals obtained for each series in the final equation. The ARCH-LM test statistic is also computed in order to test the null hypothesis that there are no ARCH effects left in the residuals, thus the results become more robust.

4. Contagion and Interdependence Effects Analysis

4.1 Descriptive Statistics

As mentioned in our methodology, the initial steps consist in analysing our time series properties. In doing so, we first transform stock prices in returns, where we use continuously compounded stock returns, calculated as the first difference of the natural log, that is, SR= Stock Returns; $SR_t = \ln\left(P_t^s\right) - \ln\left(P_{t-1}^s\right)$. Then, we use unit root tests (ADF and Phillips-Perron test)[8]; the result from both tests verify that the returns are stationary. We continue analysing the market returns per country, and we find that the series tend to exhibit a typically non-normal behaviour, and also they display volatility clustering (time-varying heteroscedasticity/GARCH effects) and fat tails (leptokurtosis), characteristics that are common in stock market returns and, in general terms, in the markets under study.

The next step consists in identifying our breakpoint, or when the global financial crisis started. As it is possible to see in the appendix (figure 1, page 30), the plot for the US stock indices (Dow Jones Industrials and S&P 500) indicates that the stock markets downturn started in October-November 2007. As we already have an initial idea regarding the possible breakdate, the Chow test[9] is considered to be appropriate. Therefore, the test is implemented in both indices and we find out that the 15th of October of 2007 can be considered as the starting point of the financial crisis. At this stage, we already know the properties of our series, and we also identify the breakpoint; therefore we are able to proceed with the discussion of the results obtained from models 1, 2 and 3 testing for contagion effects in the stock markets returns.

4.2. Findings and Discussion: a Regional Analysis

This section discusses the results obtained from the implementation of the three models outlined in the methodology. We start presenting the empirical results obtained by region, and we conclude the section providing a brief comparison of results among developed and relevant emerging economies, where the G-20 countries are used as classification criteria.

---

[8] For the sake of brevity this results are not presented in this paper, but they are available from the authors.
[9] The Chow test is explained in detail in the Appendix (see page 31)

4.2.1. A Regional Analysis

The estimated results for contagion effects in the African region are depicted in table 4.1[10], showing the results obtained from the three models starting with the two American indices. When the p-values are showing significant coefficients, this indicates contagion effects (C), while any insignificant p-value is a clear sign of no contagion effects (N).

Table 4.1: Synthesis of the Results for Contagion Effects in African Stock Markets

Countries	**Model 1**	**Model 2**	**Model 3**	**Countries**	**Model 1**	**Model 2**	**Model 3**
Dow Jones	p-values	p-values	p-values	S&P500	p-values	p-values	p-values
Egypt	C	C	C	Egypt	C	C	C
Kenya	C	N	N	Kenya	C	N	N
Morocco	N	N	N	Morocco	C	N	N
Nigeria	N	N	N	Nigeria	N	N	N
South Africa	N	N	N	South Africa	C	N	N

The results from the African region show that in the case of contagion effects derived from the Dow Jones industrial, and according to model one, there is evidence of contagion in the case of both Egypt and Kenya. However when the S&P 500 is the source of contagion the model shows that the only market that is not contaminated is Nigeria. These results are quite surprising, as the literature shows that the Forbes and Rigobon test for contagion (1999) tends not to find evidence of contagion effects. However, by acknowledging the fact that the current financial crisis has been considered by experts as the most important financial crash since the Great Depression, the correlation patterns among markets could suffer an important jump and would thus explain why the model is finding out evidence of contagion. When looking at the results obtained from models 2 and 3, where the AR(1)-GARCH(1,1) residuals are used to test for contagion, the results show that Egypt is the only case where contagion effects are identified. The results from model (3) also allow us to obtain evidence of the effects derived from the regional markets (see diagram 1 and 2 in the Appendix[11]). As is evident from the diagram, there is a bidirectional connection between the most developed markets in the region: South Africa ↔ Nigeria. It is also evident that the US stock markets have a strong influence on the South African

[10] The tables presented throughout the text are a synthesis of the main results. The appendix provides the coefficients and p-values obtained per region and model under study (see pages 32 to 43)

[11] The regional correlation analysis is presented in the appendix through a diagram analysis. The results tables have been avoided for brevity issues; however they are available from the authors.

market, and due to the interlinkages that exist among the five stock markets it is evident that any shock that affects the US stock markets would have an influence in Africa; this that can be a direct effect as it happens with Egypt. However, there is also evidence of a propagation effect triggered by spillover effects generated from the American markets that affect the South African market. Therefore, the African region suffers from financial instability derived from Egypt that is suffering from contagion effects, and also from South Africa that is suffering from spillover effects.

Table 4.2 present the synthesis of the results for contagion in the Asian Stock Markets for the three models.

Table 4.2: Synthesis of the Results for Contagion Effects in Asian Stock Markets

Countries	Model 1	Model 2	Model 3	Countries	Model 1	Model 2	Model 3
Dow Jones	p-values	p-values	p-values	S&P500	p-values	p-values	p-values
Australia	N	N	N	Australia	N	N	N
Shanghai	C	N	N	Shanghai	C	N	N
Shenzhen	C	N	N	Shenzhen	C	N	N
Hong Kong	N	N	N	Hong Kong	N	N	N
India	N	C	C	India	C	C	C
Indonesia	C	N	N	Indonesia	C	C	N
Japan	C	N	N	Japan	N	N	N
Korea	C	N	N	Korea	C	N	N
Malaysia	C	N	N	Malaysia	C	N	N
New Zealand	C	N	N	New Zealand	C	N	N
Pakistan	C	N	N	Pakistan	C	N	N
Philippines	N	N	N	Philippines	C	N	N
Singapore	C	N	N	Singapore	C	N	N
Taiwan	C	C	N	Taiwan	C	N	N
Thailand	N	N	N	Thailand	C	C	C

In this case, the results for model one are in line with the results obtained for the African markets; there are many cases where the model found evidence of contagion effects derived from the US stock markets. The findings tend to be quite consistent among the two indices. No contagion effects, derived from the Dow Jones Industrial, are found for Australia, Hong Kong, India, the Philippines and Thailand. In the case of the S&P 500 there is no evidence of contagion effects for Australia, Hong Kong and Japan. With regard to models (2) and (3), the results show that there is no evidence of contagion effects as a general finding, with the exception of India (for models (2) and (3), and Taiwan (for model (2)) in the case of the Dow Jones industrial. For the S&P 500, there is evidence of contagion in India (for models (2) and (3)), Indonesia (for model (2)) and in Thailand (for models (2) and (3)). In this case the results are showing that when the GARCH models are

testing for contagion effects, the results tend to reject the null hypothesis of contagion effects across markets. What it is very important is the analysis of the correlations that exist among the region and that are presented in Diagrams 3 and 4 (see appendix, pages 33 and 34). The diagrams for the Asian region are showing that the US stock markets are highly correlated with the Singaporean market; however the coefficient appears to be insignificant for the rest of the markets. This result shows that any shock in the US stock market will have a spillover effect that will directly affect Singapore. But more interestingly, if we look at the connections of Singapore with the rest of the region, it is evident that this market is highly connected with the most developed markets in the zone. Therefore, Singapore is acting as a propagation mechanism in the region. Consequently, any shock originating in the US stock market will hit instantly the Singaporean stock market that will act as transmitter to the rest of the Asian market. Again, the evidence in this case is showing that instead of contagion effects, what it is affecting this regional market is spillover effects derived from the strong linkages that exist across the region, and where Singapore can be considered as the entrance door.

The results obtained for the Middle East are outlined in table 4.3. In this case the results are very consistent across the three models for both US indices.

Table 4.3: Synthesis of the Results for Contagion Effects in Middle East Stock Markets

Countries	Model 1	Model 2	Model 3	Countries	Model 1	Model 2	Model 3
Dow Jones	p-values	p-values	p-values	S&P500	p-values	p-values	p-values
Israel	C	C	C	Israel	C	C	C
Jordan	N	N	N	Jordan	N	N	N
Oman	N	N	N	Oman	N	N	N
Qatar	N	N	N	Qatar	N	N	N

The evidence shows that the Israeli market is the only case where contagion effects from the US stock markets are detected. The correlation analysis obtained from model (3) is also quite surprising (see Diagram 4 and 5 in the appendix, pages 35 and 36). The Israeli stock market is directly influenced by shocks originated in the USA; however, the rest of the region does not show any evidence of being affected by the USA. Another characteristic that is worth noting is how the Israeli stock market is not correlated with any market in the region[12], while the level of correlation among the rest of the countries is very evident. In this case we think that these countries could be affected by spillover effects

[12] In this case we are making allusion specifically to the markets that have been included in this study.

derived from some markets from the Asian region, effects that are obviously not being detected here, as we did not include any of the Asian markets in this regional analysis.

In table 4.4 we are presenting the results for the American region. The main characteristics of the results obtained for this section is that they are quite mixed. The results for model (1) show evidence of contagion effects in the case of Canada, Brazil and Peru for the Dow Jones Industrial, and the S&P 500. However with regard to the S&P 500, we find contagion evidence in the case of Colombia and Mexico. It is important to notice that among the markets that are reflecting contagion effects we find the strongest markets of the region: Canada (a developed market), and Brazil and Mexico, two strong emerging economies in the area.

Table 4.4: Synthesis of the Results for Contagion Effects in American Stock Markets

Countries	**Model 1**	**Model 2**	**Model 3**	**Countries**	**Model 1**	**Model 2**	**Model 3**
Dow Jones	p-values	p-values	p-values	S&P500	p-values	p-values	p-values
Canada	C	C	N	Canada	C	N	N
Argentina	N	C	C	Argentina	N	C	C
Brazil	C	C	N	Brazil	C	C	N
Chile	N	C	C	Chile	N	C	C
Colombia	N	C	C	Colombia	C	C	C
Mexico	N	C	C	Mexico	C	C	C
Peru	C	C	N	Peru	C	C	N
Venezuela	N	N	N	Venezuela	N	N	N

Looking at the results from model (2), the results show that contagion effects characterise the region, where no contagion effects are found in the case of Venezuela for both US indices, and also in the case of Canada for the S&P 500 as the source of contagion. Finally, the results from model (3) are consistent for both US markets, where contagion effects are found in the case of Argentina, Chile, Colombia and Mexico. These results are a clear indication that so far the Latin American region is the one that seems to be more susceptible to be affected by contagion effects. The analysis of correlations from model (3) also reflects that with the exception of Venezuela, the rest of the markets are highly correlated among themselves, and they are also affected by spillover effects from the US markets. Therefore, and as Lau, Mathieson and Yao (2004) concluded, contagion is more evident in Latin America than in Asia, a statement that is in clear line with our findings, where it is possible to appreciate how the Latin American stock markets react to a higher extent to US markets shocks. While in the case of Asia, it is possible to see that the

financial reaction seems to start as a secondary effect originating from the Singaporean stock market, but not directly from the US.

Table 4.5 illustrates the results for the East European region, and in consistency with what was found for the American region, the results are quite mixed for the three models. The results from Model (1) are consistent for both US indices, and they show that there are contagion effects in the case of Croatia, the Czech Republic, Hungary, Romania, Slovenia, and Ukraine. In the case of model (2) there is no evidence of contagion effects in Slovenia and Ukraine when the Dow Jones is the source of shock. While, in the case of S&P 500 there are contagion effects in almost all the markets, with the exception of Ukraine. When comparing these results with the ones obtained from model (3), the results show that Croatia Hungary, Romania, and Turkey are the only cases where evidence of contagion is found. In this case, it is obvious that after including the residuals from the regional markets the results from model (2) are adjusted, which signifies a clear case of relevant variables being omitted.

Table 4.5: Synthesis of the Results for Contagion Effects in Easter European Stock Markets

Countries	**Model 1**	**Model 2**	**Model 3**	**Countries**	**Model 1**	**Model 2**	**Model 3**
Dow Jones	p-values	p-values	p-values	S&P500	p-values	p-values	p-values
Croatia	C	C	C	Croatia	C	C	C
Czech Republic	C	C	N	Czech Republic	C	C	N
Hungary	C	C	C	Hungary	C	C	C
Poland	N	C	N	Poland	N	C	N
Romania	C	C	C	Romania	C	C	C
Russia	N	C	N	Russia	N	C	N
Slovenia	C	N	N	Slovenia	C	C	N
Turkey	N	C	C	Turkey	N	C	C
Ukraine	C	N	N	Ukraine	C	N	N

Another relevant fact is the correlation analysis showed by model (3) (see diagram 7 and 8 in the appendix, pages 38 and 39). In this case it is evident that the region is characterised by high levels of correlation; in the case of the Dow Jones Industrial the markets affected by spillovers effects are: the Czech Republic, Poland and Romania. As a consequence the rest of the region is affected by shocks in the US in an indirect way. The Czech Republic and Poland are the markets that would lead the spillover wave, as they are considered to be the developed ones in the region. Thus, they will be the entrance mechanism to propagate spillover effects in the area. When looking at the S&P 500 the results show that the spillovers effects from this market would directly affect the Czech Republic, Poland, and Romania (as in the case of the Dow Jones Industrials), but there is

also an effect in Russia, and Turkey. Therefore, it seems that the S&P 500 has a greater impact in the region; however, it is acting in the same fashion as the Dow Jones Industrial, affecting the major markets (the Czech Republic, Poland and Russia); the effects are spread across the region.

Finally, in table 4.6 the results for the European region are summarised. There is also a problem of consistency regarding the results obtained from the three models. So far, it is evident that the main differences between model (3) and the other two models is the inclusion of the regional stock markets, something that minimises the problem of misspecification bias. In models (1) and (2) there is some evidence of contagion affecting markets across the region, and there is some level of consistency with regard to the two American indices. The results from model (3) are quite resounding and they show that in general terms there is no evidence of contagion effects in the region, with some exceptions: Ireland (in the case of Dow Jones Industrials and S&P 500), and Belgium (in the case of S&P 500).

Table 4.6: Synthesis of the Results for Contagion Effects in European Stock Markets

Countries	**Model 1**	**Model 2**	**Model 3**	**Countries**	**Model 1**	**Model 2**	**Model 3**
Dow Jones	p-values	p-values	p-values	S&P500	p-values	p-values	p-values
Austria	C	N	N	Austria	C	C	N
Belgium	N	C	N	Belgium	N	C	C
Denmark	N	C	N	Denmark	N	C	N
Finland	N	C	N	Finland	C	C	N
France	C	N	N	France	C	N	N
Germany	C	N	N	Germany	C	N	N
Greece	N	C	N	Greece	N	C	N
Iceland	N	N	N	Iceland	N	N	N
Ireland	C	C	C	Ireland	C	C	C
Italy	N	N	N	Italy	N	N	N
Luxembourg	C	C	N	Luxembourg	C	C	N
Netherlands	C	N	N	Netherlands	C	C	N
Norway	C	N	N	Norway	C	N	N
Spain	N	N	N	Spain	N	N	N
Sweden	N	C	N	Sweden	N	C	N
Switzerland	N	C	N	Switzerland	N	C	N
UK	N	N	N	UK	N	N	N

The correlation analysis is quite categorical as well, showing that in this case the Dow Jones Industrial and S&P 500, there is evidence of spillover effects that have a direct impact in the UK, Germany, and Greece. As it happened with the Asian region, there is a detonator of shock transmission, and in this case the most developed markets in Europe are the ones that will be directly affected by the shock in the US. These markets are the ones

that act as a propagator mechanism to the rest of the markets, due to fact of high levels of correlation among the region (see pages 41 and 43 in the appendix). In this case, any effect from Greece would be minimum in the region, as this market is very small in comparison to the UK and Germany.

The main conclusion obtained from the regional analysis highlights the importance of interlinkages across regional markets, where one relevant market has the power to act as a transmitter of shocks to the rest of the region. As a result, it is evident that the current financial crisis does generate an important spillover effect around the world; however, the evidence does not show strong support to the notion of contagion effects derived from the US stock markets. These findings are very important, as they are suggesting that contagion effects across financial markets need more attention, especially regarding to estimation techniques, and omission of relevant variables.

4.2.2. A Comparative Analysis

In this section we aggregate the results achieved from the regional analyses, following the G-20 countries as a reference. The findings are shown in table 4.7.

Table 4.7: Synthesis of the Results for Contagion Effects in the G-20*

Countries	**Model 1**	**Model 2**	**Model 3**	**Countries**	**Model 1**	**Model 2**	**Model 3**
Dow Jones	p-values	p-values	p-values	S&P500	p-values	p-values	p-values
Developed Markets							
Australia	N	N	N		N	N	N
Canada	C	C	C		N	C	C
France	C	N	N		C	N	N
Germany	C	N	N		C	N	N
Italy	N	N	N		N	N	N
Japan	C	N	N		N	N	N
UK	N	N	N		N	N	N
Emerging Markets							
Argentina	N	C	C		N	C	C
Brazil	C	C	N		C	C	N
China	C	N	N		C	N	N
India	N	C	C		C	C	C
Indonesia	C	N	N		C	C	N
Mexico	N	C	C		C	C	C
Russia	N	C	N		N	C	N
South Africa	N	N	N		C	N	N
South Korea	C	N	N		C	N	N

* The US is considered as the source of contagion, therefore is not included in the sample. Saudi Arabia stock market data was not available from the year 2003, so it was not considered to be included in the whole sample. The EU is not taking into account as the individual countries where analysed.

According to Lee et al. (2007), contagion effects are more obvious in developing financial markets than in developed ones, something that is widely echoed in the literature about contagion. If we look at the results for the G-20 countries, the results put forward by model (1) tend to contradict this belief in the case of the Dow Jones Industrial as the source of contagion, since Australia, Canada, France, Germany, and Japan are reflecting contagion effects. However, the results from the S&P 500 are less challenging, and contagion evidence is found in only two countries (Canada and France). On the other hand, the results from model (2) and (3) are very compelling in showing that developed countries do not tend to present contagion effects, since the results show that Canada is the only country that is suffering from contagion effects. In the case of emerging economies, the results from the three models show that these economies tend to be affected from contagion effects in a larger extent than the developed countries. For this reason, we conclude that our findings tend to be consistent and in line with the notion that contagion effects seem to be a concern for emerging economies.

In order to conclude this section, we agree with the suggestion of Ajayi and Mehdian (1995) according to which advanced and emerging equity markets react differently to US market surprises; the authors suggest that international diversification among advanced and emerging markets may be beneficial.

4.3 Diagnostic Tests

The ARCH test is applied in the residuals obtained from the AR(1)-GARCH(1,1) (model (2) and (3)), to verify that not ARCH effects where left, as it is well-known that ignoring ARCH effects may result in a loss of efficiency of the ARCH and GARCH estimation. This could also generate major problems in the contagion methodology that we proposed to check for contagion effects in this paper. The results from the test show that overall the residuals where free of ARCH effects; therefore we can consider that our results are robust.

5. Conclusions and Results Major Implications

The main results outlined in this paper could be summarised as follows: i) the evidence shows that the current global financial crisis has been affecting differently the world economy regions, but in general terms, there is not evidence that supports the existence of world market, or regional market contagion effects. ii) The results suggest that instead of contagion, markets suffered from spillover effects, that see their origin in the US economy, and that were transmitted and propagated by some key countries into the different regions (Singapore in Asia, UK in Europe). As a consequence, the evidence shows that regions are characterised by presenting high levels of correlation, and therefore, the spillover effects are propagated on a worldwide basis.

Past events regarding financial crises have led to the view that financial crises tend to spread across countries like a contagious disease unless they are curtailed by vigorous international intervention. In this regard, it seems that the various stimulus plans implemented by different countries around the world have been a great help that contributed to minimise the effects of the financial distress. As a consequence, and as we argued at the beginning of this study we think that this kind of macroeconomic decisions should be considered when analysing contagion effects across markets; otherwise the modelling technique will be biased.

According to Pérez, Titelman and Pineda (2009) in order to isolate contagious effects, the relative strength of market interdependence and contagion needs to be both modelled simultaneously and separately identified. We also suggest that models testing for contagion need to consider the effects derived from other equity markets, money markets, Forex markets, and credit markets, government decisions, etc. In this regard it would be possible to establish a stronger way to measure for contagion effects. However, we also believe that researchers should focus their attention and efforts in detecting initial signs of market instability, of unsustainable growth and high risk operations in financial markets, all elements that would drive an economy into recession. These models that help to identify such signs would be very helpful in designing the appropriate strategies that should be implemented to prevent future economic crises.

6. References

Ajayi, R., and Mehdian., S., "Global Reaction of Security Prices to the Major US-Induced Surprises: An Empirical Investigation". Applied Financial Economics, Vol.5, 1995, pp. 203-218.

Balit, C., (2007) " Financial Crises, Panic and Contagion: Evidence form a Cross-Country Comparison Using Two Time Frames". Journal of Business and Public Affaris, vol. 2, pp.1-17.

Bekaert, G., et al., (2005) "Market Integration and Contagion". Journal of Business, vol. 78, pp. 39-69.

Billio, M., Pelizzon, Loriana (2003), "Contagion and Interdependence in Stock Markets: Have they been misdiagnosed? Journal of Economics and Business, vol. 55, pp. 405-426.

Bollerslev, T., Chou, R., and Kroner, K (1992)" ARCH Modelling in Finance: A Review of the Theory and Empirical Evidence". Journal of Econometrics, vol. 52, pp. 5-59.

Bordo, M., and Panini, A., (2000) "Are Financial Crises Becoming Increasingly more Contagious? What is the Historical Evidence on Contagion? National Bureau of Economics Research. www.nber.org/papers/w7900.

Bowman, R., et al. (2007) " Contagion in World Equity Markets and the Asian Economic Crisis", retrieved from www.SSRN.com

Caporale, G. M. et al. (2009) "Volatility Spillovers and Contagion from Mature to Emerging Stock Markets", electronic copy from: www.SSRN.com

Chow, G.C., (1960), "Tests of Equality Between Sets of Coefficients in Two Linear Regressions". Econometrica 28(3): 591–605.

Domowitz, I., Hakkio, C.S., (1985)"Conditional Varianceand the Risk Premium in the Foreign Exchange Market", Journal of International Economics, 19, pp.47-66, 1985.

Dornbusch, R., Park, Y., Claessens, S., (2000), "Contagion: Understanding How it Spreads" The World Bank Research Observer, Vol. 15, No.2, 167-195.

Dungey, M., et al. (2004) "Empirical Modelling of Contagion: A Review of Methodologies". International Monetary Fund, Working Paper 04-78.

Edwards, S., and Susmel, R., (2001) " Volatility Dependence and Contagion in Emerging Equity Markets". Journal of Development Economics, vol 66, pp. 505-532.

Engle, R.F., Lilien, D.M., Robins, R.P., (1987), "Estimating Time Varying Risk Premia in the Term Structure: The ARCH-M Model", Econometrica, 55, pp. 391-407.

Forbes, K., and Rigobon, R., (1999), "Measuring Contagion: Conceptual and Empirical Issues" mimeo, MIT.

Forbes, K., and Rigobon, R., (2002), "No contagion, only Interdependence: Measuring Stock Market Co-movement" Journal of Finance 57(5), 2223-2261.

Fratzscher, M., (2000) "On Currency Crisis and Contagion". Institute of International Economics, number 00-9.

Khalid, A., and Kawai, M., (2003) " Was Financial Market Contagion the Source of Economic Crisis in Asia? Evidence Using a Multivariate VAR model". Journal of Asian Economics, vol. 14, pp. 131-156.

Khalid, A., and Rajaguru, F., (2006) " Financial Market Contagion or Spillovers Evidence from Asian Crisis Using Multivariate GARCH Approach". Bond University. Australia.

Lau, C., Mathieson, D., and Yao, J (2004)" Extreme Contagion in Equity Markets" . IMF Staff Papers, Vol. 51, no.2, pp. 386-408.

Lee, H.Y., et al. (2007) " Contagion Effect in Financial Markets After the South- East Tsunami. Research in International Business and Finance, Vol. 21, pp. 281-296.

Malik, F., and Ewing, B. T., (2009) " Volatility Transmission between Oil Prices and Equity Sector Returns". Internal Review of Financial Analysis, vol. 18, pp. 95-100.

Nanto, D., (2008) " The U.S Financial Crisis: The Global Dimension with Implications for U.S Policy". CRS Report for Congress, November 10, Code RL34742.

Pérez, E., et al (2009) "The Current Global Financial Crisis: What was really "purely prime? Development Studies Section, ECLAC, Santiago, Chile. United Nations.

Randhawa, D., and Low Mei, A., (2005) " International Contagion in Emerging Markets", retrieved from Saw Centre for Financial Studies. Working Paper Series, 05-03.

Taketa, K., (2004) "Contagion of Currency Crisis Across Unrelated Countries". IMES Discussion Papers Series. Paper no. 2004-E-22.

7. Appendix

7.1 List of Countries and Stock Markets under Analysis

African Stock Markets

Egypt: EFG-Price Index
Kenya: Nairobi Se-Price Index
Morocco: All Share-Price Index
Nigeria: All Share-Price Index
South Africa: FTSE/JSE All Share-Price Index

Asian Stock Markets

Australia: ASX All Ordinaries-Price Index
Shanghai: Shanghai Se Composite-Price Index
Shenzhen: Shenzhen Se Composite-Price Index
Hong Kong: Hang Seng Price Index
India: Sensex 30 Sensitive Price Index
Indonesia: Jakarta Se Composite-Price Index
Japan: Nikkei 225 Stock Average-Price Index
Korea: Korea Se Composite-Price Index
Malaysia: KLCI Composite-Price Index
New Zealand: NZX 50-Price Index
Pakistan: Karachi Se 100-Price Index
Philippines: Philippine Se-Price Index
Singapore: Singapore Straits Price Index
Taiwan: Taiwan Se Weighted-Price Index
Thailand: Bangkok S.E.T-Price Index

Middle East Stock Markets

Israel: Israel TA 100
Jordan: Amman Se Financials Market
Oman: Oman Muscat Securities MKT
Qatar: Qatar DSM Market

American Stock Markets

US: Dow Jones Industrials/ S&P 500
Canada: S&P/TSX Composite Index
Argentina: Merval-Price Index
Brazil: Bovespa-Price Index
Chile: IPSA-Price Index
Colombia: IGBC Index
Mexico: IPC-Price Index
Peru: Lima Se General-Price Index
Venezuela: Venezuela Se General

Eastern European Stock Markets

Croatia: CROBEX-Price Index
Czech Republic: Prague Se PX-Price Index
Hungary: Budapest-Price Index
Poland: Warsaw General Index
Romania: Romania BET-Price Index
Russia: RTS Index
Slovenia: Slovenian EXCH. Stock-Price Index
Turkey: ISE National 100-Price Index
Ukraine: Ukraine PFTS-Price Index

European Stock Markets

Austria: ATX-Austrian Trade Index
Belgium: BEL 20-Price Index
Denmark: OMX-Copenhagen-Price Index
Finland: OMX-Helsinki-Price Index
France: CAC 40-Price Index
Germany: DAX 30-Price Index
Greece: Athex Composite-Price Index
Iceland: OMX Iceland All Share-Price Index
Ireland: Ireland Se Overall (ISEQ)-Price Index
Italy: FTSE MIB Index
Luxembourg: Luxembourg Se General-Price Index
Netherlands: AEX Index
Norway: Oslo Se OBX-Price Index
Spain: IBEX 35-Price Index
Sweden: OMX Stockholm 30-Price Index
Switzerland: Swiss Market Index
UK: FTSE 100-Price Index

Figure 1: Stock Price Indices

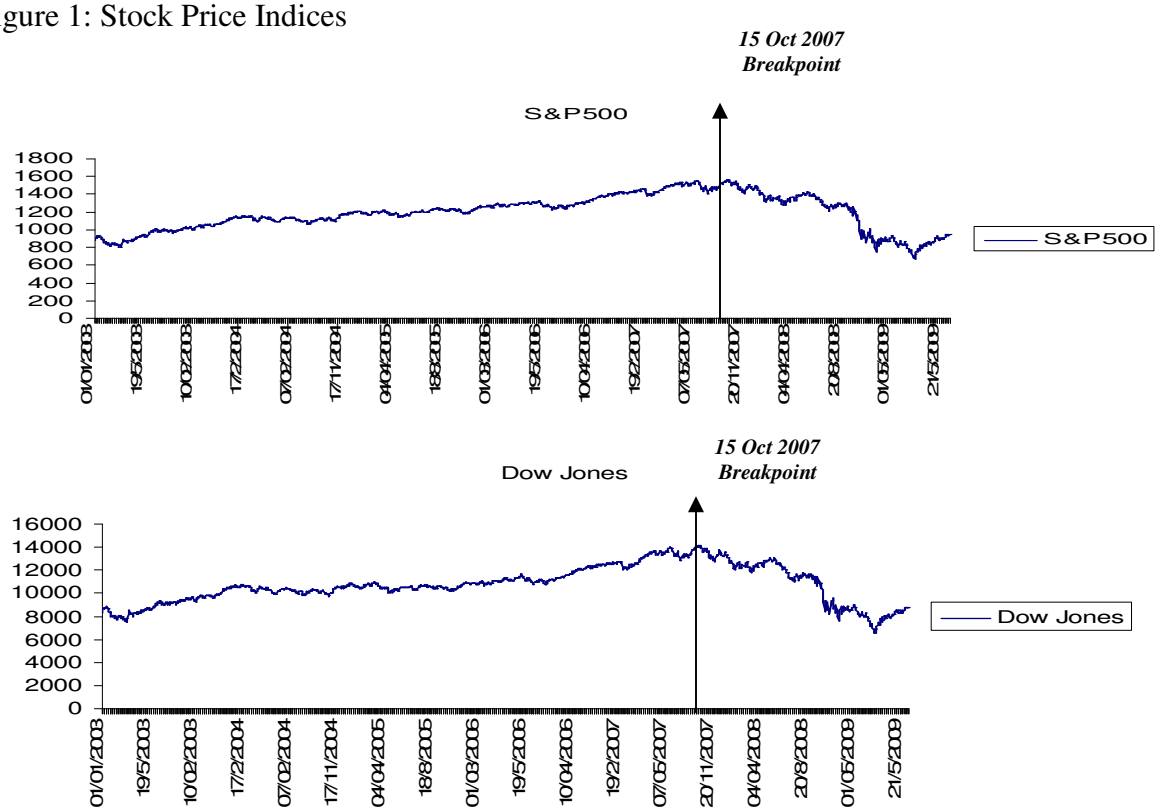

Structural breaks for the US markets where identified. The Chow test was applied to both stock indices, and a common breakpoint was identified to be the 15th October 2007, a time when both markets started their downturn. Consequently, this point is taken as the period that would considered as the turmoil event in the formulation of Model 1, 2 and 3 to perform our econometric analysis.

The Chow-test is specified as follows,

1) Firstly, we run the regression using all the data, before and after the structural break we collected RSS_c.
2) Secondly, we run two separate regressions on the data before and after the structural break, collecting the RSS in both cases, giving RSS_1 and RSS_2.

3) Using these three values we calculate the test statistic from the following formula:

$$F = \frac{RSS_c - (RSS_1 + RSS_2)/k}{RSS_1 + RSS_2 / n - 2k}$$

4) Then, we find the critical values in the F-test tables, in this case it has F(k,n-2k) degrees of freedom.

5) The null hypothesis is that there is no structural break. We conclude that all the markets suffer from structural break the 15th of October of 2007. This information is then used in order to implement our contagion (Forbes and Rigobon, 2002) and VAR-GARCH contagion study.

Table 1: Contagious Effects in African Stock Markets

Countries	Model 1		Model 2		Model 3	
Dow Jones	γ_3	p-values	θ_2	p-values	φ_2	p-values
Egypt	0.11	0.04**	0.11	0.04**	0.10	0.02**
Kenya	0.13	0.02**	-0.03	0.58	-0.03	0.50
Morocco	0.00	0.98	-0.01	0.81	-0.02	0.69
Nigeria	0.04	0.43	-0.06	0.27	-0.06	0.25
South Africa	-0.08	0.13	0.04	0.43	0.03	0.51
Countries	**Model 1**		**Model 2**		**Model 3**	
S&P500	γ_3	p-values	θ_2	p-values	$\varnothing_2$	p-values
Egypt	4.71	0.04**	0.10	0.06***	0.09	0.07***
Kenya	5.32	0.02**	-0.02	0.69	-0.03	0.63
Morocco	0.42	0.85	-0.01	0.81	0.00	0.94
Nigeria	1.83	0.43	-0.05	0.35	-0.05	0.31
South Africa	-4.55	0.04**	0.06	0.25	0.05	0.31

*1% significance level, **5% significance level, ***10% significance level. The values appearing as significant identify contagion effects in the markets derived from the US stock markets (Dow Jones Industrials, S&P500).

Diagram 1: African Stock Markets-Dow Jones Industrials (results from model 3)

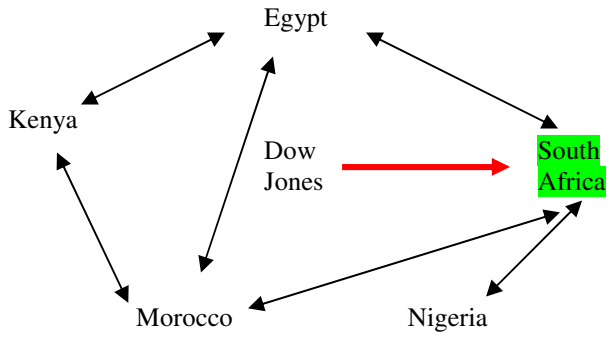

Diagram 2: African Stock Markets-S&P 500 (results from model 3)

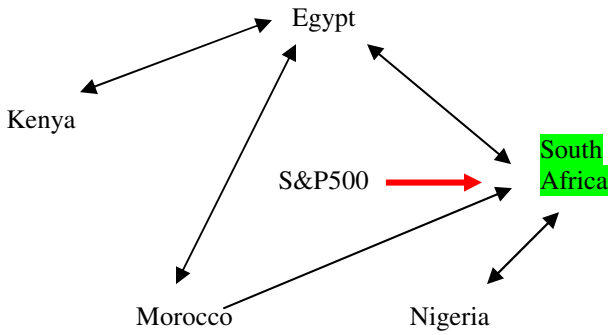

Table 2: Contagious Effects in Asian Stock Markets-Dow Jones Industrials

Countries	Model 1		Model 2		Model 3	
	γ_3	p-values	θ_2	p-values	φ_2	p-values
Australia	0.02	0.62	0.02	0.68	-0.03	0.51
Shanghai	0.16	0.00*	-0.03	0.63	-0.01	0.75
Shenzhen	0.12	0.03**	-0.03	0.59	0.00	0.93
Hong Kong	-0.02	0.70	0.06	0.23	-0.01	0.68
India	-0.09	0.10	0.19	0.00*	0.14	0.00*
Indonesia	-0.14	0.01*	0.07	0.15	0.00	0.97
Japan	0.11	0.02**	0.03	0.63	-0.02	0.54
Korea	-0.18	0.00*	0.06	0.22	0.01	0.74
Malaysia	-0.18	0.00*	0.09	0.10	0.04	0.39
New Zealand	0.15	0.00*	0.01	0.69	0.01	0.76
Pakistan	-0.30	0.08**	0.03	0.58	0.01	0.88
Philippines	-0.05	0.26	0.00	0.95	-0.04	0.38
Singapore	-0.12	0.02**	0.09	0.08***	0.01	0.81
Taiwan	-0.13	0.01*	0.05	0.35	0.00	0.96
Thailand	-0.06	0.23	0.14	0.01*	0.08	0.07***

*1% significance level, **5% significance level, ***10% significance level. The values appearing as significant identify contagion effects in the markets derived from the US stock markets (Dow Jones Industrials, S&P500).

Diagram 3: Asian Stock Markets-Dow Jones Industrials (results from model 3)

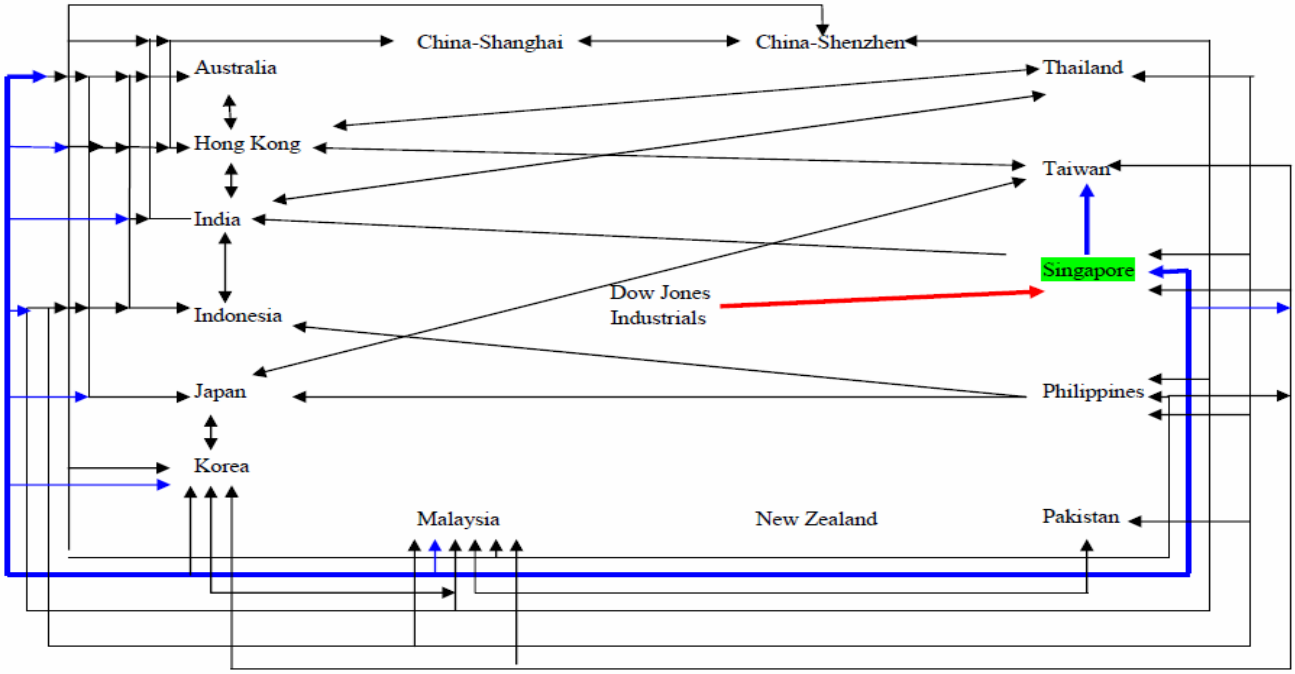

Table 3: Contagious Effects in Asian Stock Markets-S&P 500 (Results from model 3)

Countries	Model 1		Model 2		Model 3	
	γ3	p-values	θ2	p-values	ø2	p-values
Australia	-0.68	0.72	0.03	0.62	-0.02	0.59
Shanghai	6.83	0.00*	-0.03	0.62	0.00	0.79
Shenzhen	4.93	0.03**	-0.03	0.58	0.00	0.91
Hong Kong	-1.99	0.35	0.05	0.29	-0.02	0.60
India	-4.64	0.04**	0.18	0.00*	0.13	0.00*
Indonesia	-6.99	0.00*	0.09	0.09***	0.02	0.71
Japan	2.79	0.15	0.03	0.60	-0.02	0.65
Korea	-8.53	0.00*	0.05	0.31	0.00	0.91
Malaysia	-9.10	0.00*	0.08	0.13	0.03	0.52
New Zealand	5.29	0.01*	0.01	0.75	0.01	0.80
Pakistan	-13.95	0.06***	0.04	0.46	0.02	0.74
Philippines	-3.61	0.08***	0.01	0.85	-0.03	0.54
Singapore	-6.21	0.00*	0.08	0.10	0.01	0.89
Taiwan	-6.60	0.00*	0.04	0.44	-0.01	0.86
Thailand	-4.67	0.04**	0.15	0.00*	0.09	0.04**

*1% significance level, **5% significance level, ***10% significance level. The values appearing as significant identify contagion effects in the markets derived from the US stock markets (Dow Jones Industrials, S&P500).

Diagram 4: Asian Stock Markets-S&P500 (results from model 3)

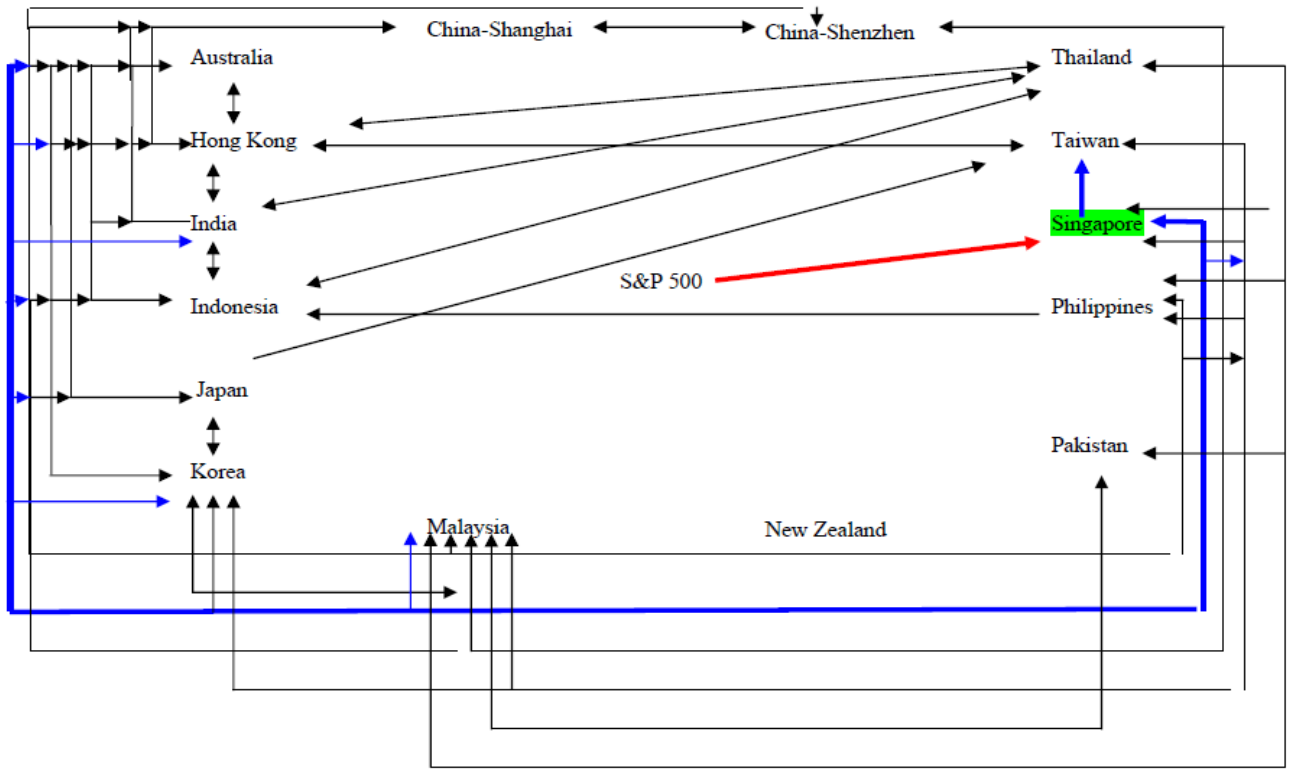

Table 4: Contagious Effects in the Middle East Stock Markets-Dow Jones Industrials

Countries	Model 1		Model 2		Model 3	
	γ3	p-values	θ2	p-values	φ2	p-values
Israel	-0.09	0.11	0.10	0.06	0.09	0.06
Jordan	-0.02	0.69	-0.01	0.79	-0.03	0.62
Oman	0.03	0.58	0.03	0.55	0.03	0.59
Qatar	0.03	0.63	0.03	0.36	0.03	0.39

*1% significance level, **5% significance level, ***10% significance level. The values appearing as significant identify contagion effects in the markets derived from the US stock markets (Dow Jones Industrials, S&P500).

Diagram 4: Middle East Stock Markets-Dow Jones Industrials (results from model 3)

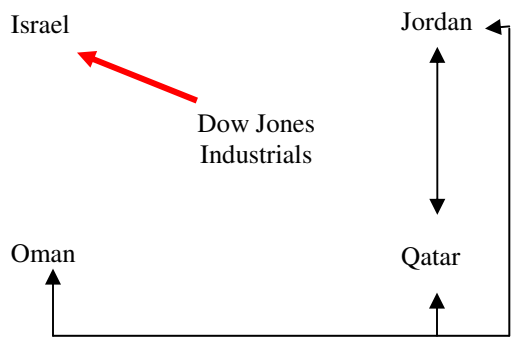

Table 4: Contagious Effects in the Middle East Stock Markets-S&P 500 (results from model 3)

Countries	Model 1		Model 2		Model 3	
	γ3	p-values	θ2	p-values	φ2	p-values
Israel	-3.97	0.08	0.11	0.04	0.10	0.04
Jordan	-0.77	0.74	0.00	0.93	-0.02	0.75
Oman	0.85	0.71	0.03	0.58	0.02	0.64
Qatar	0.67	0.78	0.03	0.41	0.03	0.45

*1% significance level, **5% significance level, ***10% significance level. The values appearing as significant identify contagion effects in the markets derived from the US stock markets (Dow Jones Industrials, S&P500).

Diagram 5: Middle East Stock Markets-S&P 500 (results from model 3)

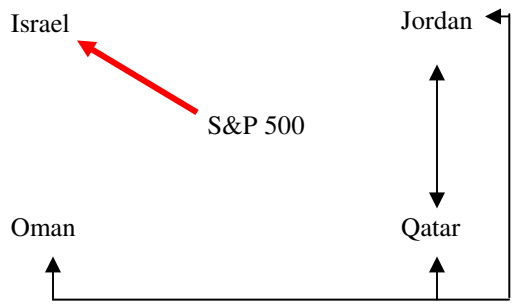

Table 5: Contagious Effects in American Stock Markets-Dow Jones Industrials

Countries	Model 1		Model 2		Model 3	
Dow Jones	γ3	p-values	θ2	p-values	φ2	p-values
Canada	5.14	0.00*	0.07	0.08***	-0.02	0.62
Argentina	0.00	0.97	0.18	0.00*	0.08	0.07***
Brazil	-0.11	0.01**	0.10	0.02**	-0.02	0.54
Chile	0.00	0.71	0.21	0.00*	0.13	0.00*
Colombia	0.00	0.14	0.16	0.00*	0.08	0.09***
Mexico	0.00	0.14	0.16	0.00*	0.08	0.03**
Peru	0.00	0.00*	0.15	0.00*	0.08	0.10
Venezuela	0.02	0.78	0.00	0.97	-0.02	0.77

*1% significance level, **5% significance level, ***10% significance level. The values appearing as significant identify contagion effects in the markets derived from the US stock markets (Dow Jones Industrials, S&P500).

Diagram 5: American Stock Markets-Dow Jones Industrials (results from model 3)

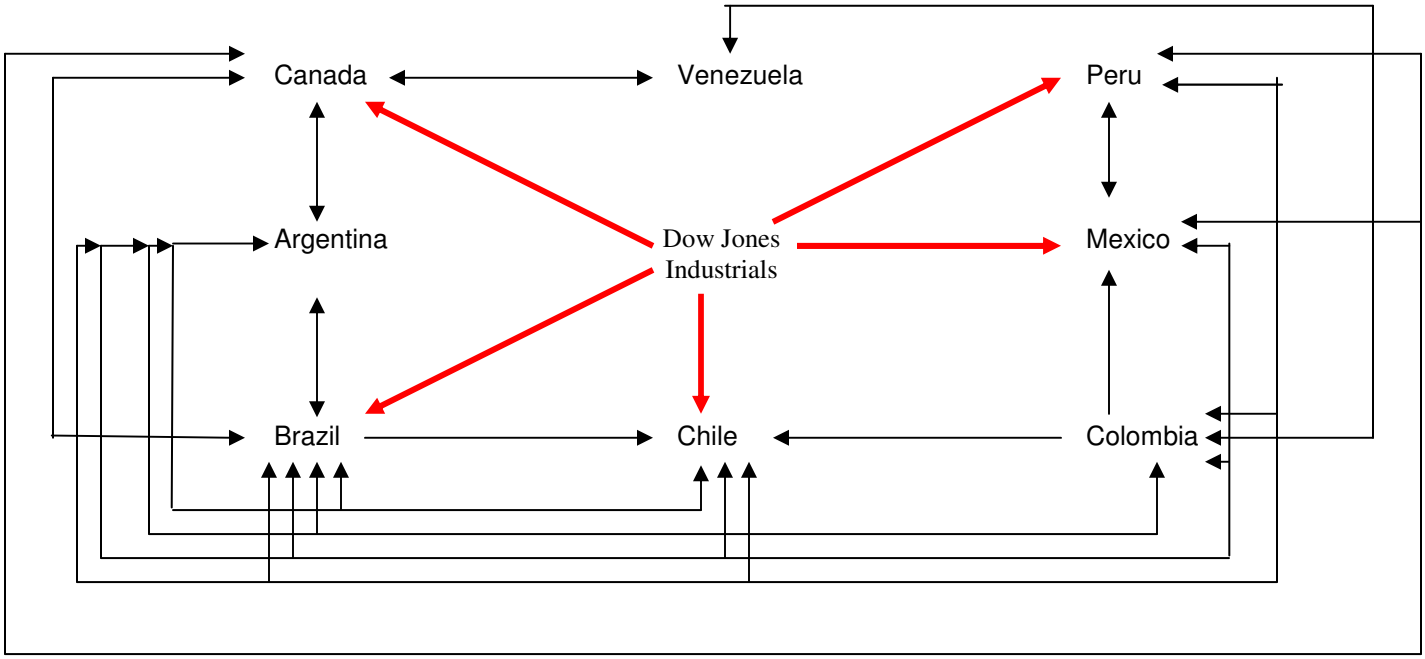

Table 6: Contagious Effects in American Stock Markets-S&P 500

Countries	Model 1		Model 2		Model 3	
	γ3	p-values	θ2	p-values	φ2	p-values
Canada	155.07	0.00*	0.06	0.14	-0.02	0.58
Argentina	-1.32	0.52	0.18	0.00*	0.09	0.04**
Brazil	-7.28	0.00*	0.10	0.01*	-0.01	0.72
Chile	-0.01	0.43	0.20	0.00*	0.12	0.01*
Colombia	-0.10	0.08***	0.16	0.00*	0.09	0.07***
Mexico	-0.11	0.01*	0.15	0.00*	0.08	0.03**
Peru	0.17	0.00*	0.17	0.00*	0.06	0.19
Venezuela	-0.06	0.98	-0.02	0.75	-0.04	0.50

*1% significance level, **5% significance level, ***10% significance level. The values appearing as significant identify contagion effects in the markets derived from the US stock markets (Dow Jones Industrials, S&P500).

Diagram 6: American Stock Markets-S&P 500 (results from model 3)

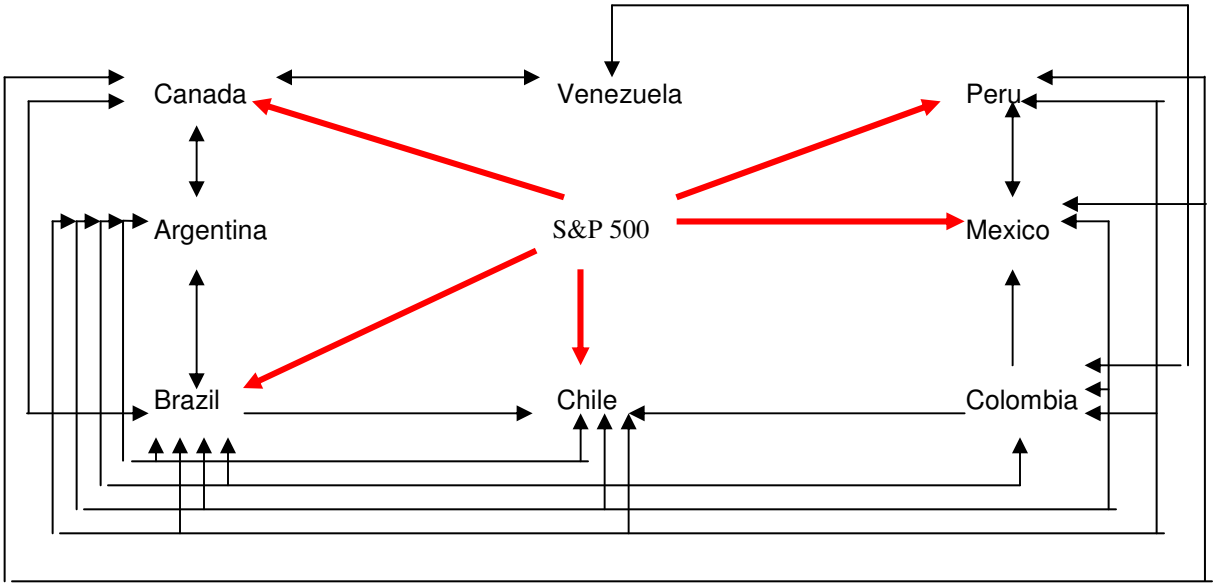

Table 7: Contagious Effects in Easter European Stock Markets-Dow Jones Industrials

Countries	Model 1		Model 2		Model 3	
	γ3	p-values	θ2	p-values	φ2	p-values
Croatia	0.36	0.00*	0.24	0.00*	0.15	0.00*
Czech Republic	0.13	0.01*	0.15	0.00*	0.00	0.95
Hungary	0.19	0.00*	0.20	0.00*	0.10	0.02**
Poland	0.00	0.75	0.12	0.02**	-0.04	0.33
Romania	0.25	0.00*	0.22	0.00*	0.14	0.00*
Russia	0.07	0.18	0.09	0.07***	-0.03	0.54
Slovenia	0.13	0.02**	0.08	0.14	0.01	0.86
Turkey	0.08	0.12	0.22	0.00*	0.11	0.01*
Ukraine	0.10	0.06***	0.03	0.51	-0.04	0.48

*1% significance level, **5% significance level, ***10% significance level. The values appearing as significant identify contagion effects in the markets derived from the US stock markets (Dow Jones Industrials, S&P500).

Diagram 7: Easter European Stock Markets-Dow Jones Industrials (results from model 3)

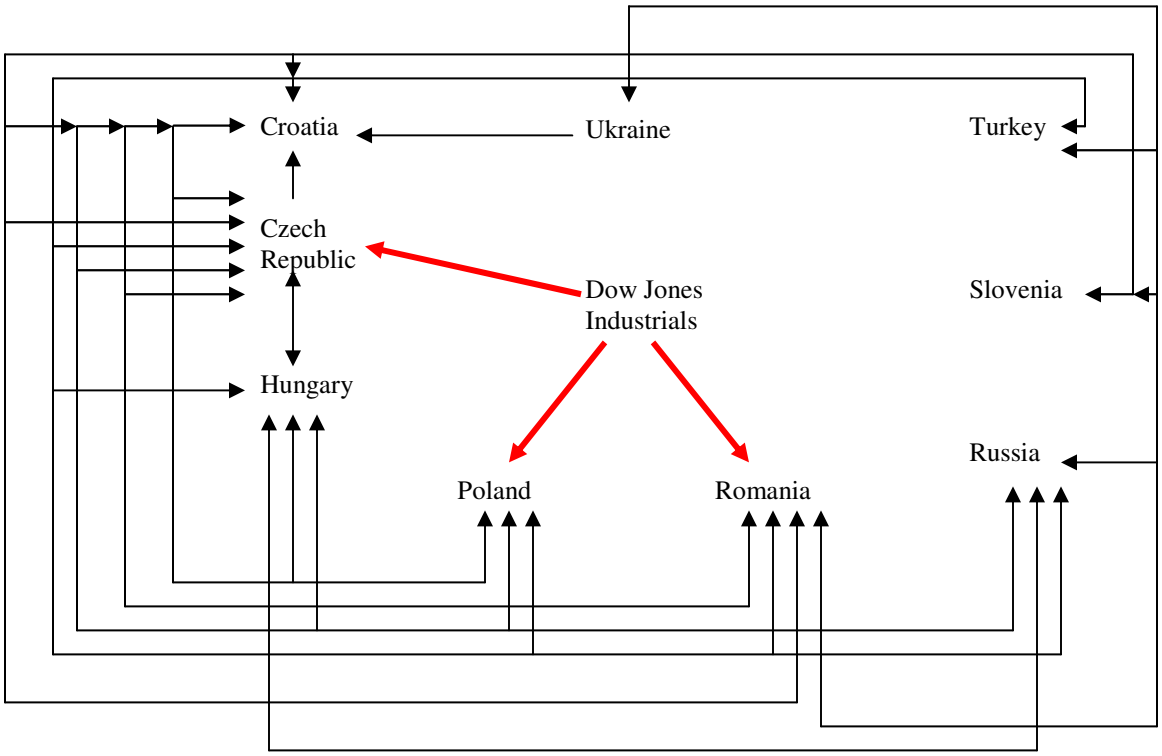

Table 8: Contagious Effects in Easter European Stock Markets-S&P 500

Countries	Model 1		Model 2		Model 3	
	γ3	p-values	θ2	p-values	φ2	p-values
Croatia	14.23	0.00*	0.24	0.00*	0.15	0.00*
Czech Republic	5.48	0.01*	0.16	0.00*	0.01	0.84
Hungary	8.40	0.00*	0.22	0.00*	0.11	0.01*
Poland	0.00	0.96	0.12	0.02**	-0.04	0.28
Romania	9.67	0.00*	0.22	0.00*	0.13	0.01*
Russia	2.34	0.30	0.10	0.05***	-0.03	0.56
Slovenia	5.58	0.02**	0.09	0.09***	0.02	0.72
Turkey	2.05	0.36	0.21	0.00*	0.09	0.05**
Ukraine	5.04	0.03**	0.07	0.21	-0.01	0.92

*1% significance level, **5% significance level, ***10% significance level. The values appearing as significant identify contagion effects in the markets derived from the US stock markets (Dow Jones Industrials, S&P500).

Diagram 8: Easter European Stock Markets-S&P 500 (results from model 3)

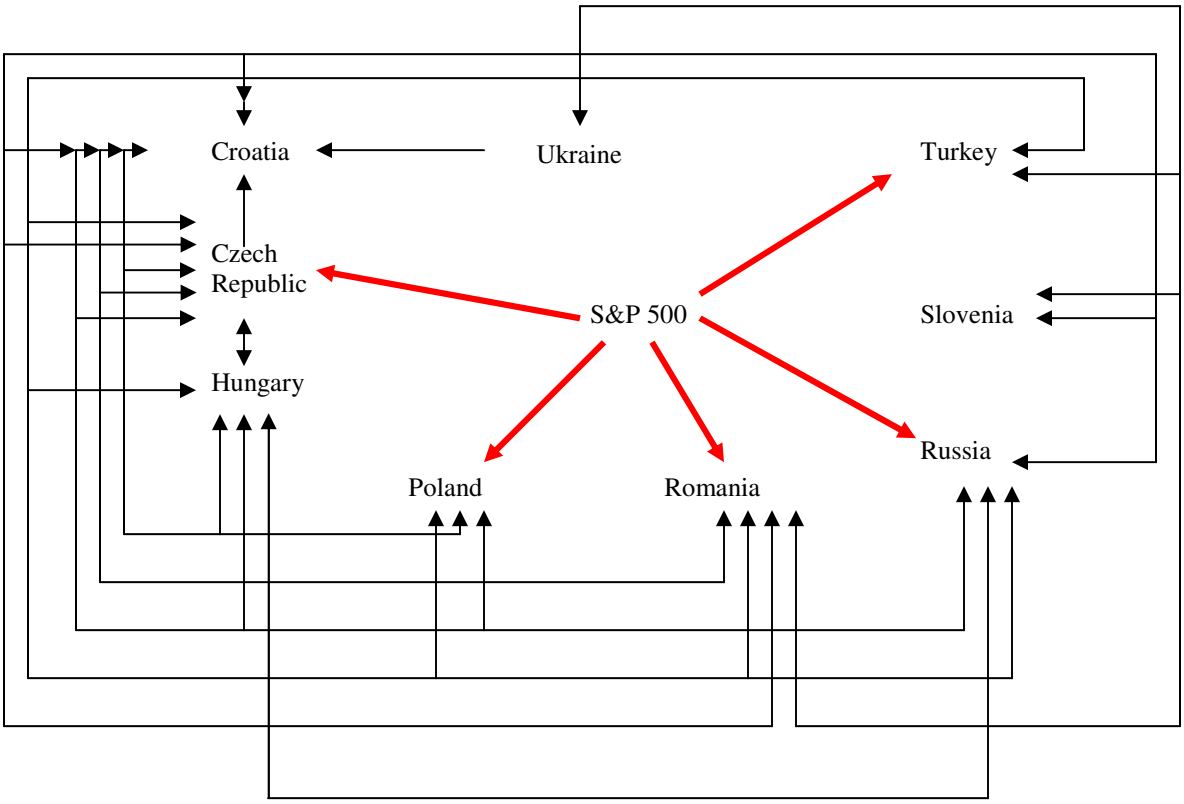

Table 9: Contagious Effects in European Stock Markets-Dow Jones Industrials

Countries	Model 1		Model 2		Model 3	
	$\gamma 3$	p-values	$\theta 2$	p-values	$\varphi 2$	p-values
Austria	0.17	0.00*	0.08	0.10	0.00	0.93
Belgium	-0.05	0.31	0.12	0.01*	0.04	0.11
Denmark	0.05	0.36	0.10	0.04**	0.01	0.68
Finland	-0.07	0.15	0.08	0.09***	0.01	0.78
France	-0.11	0.02**	0.07	0.13	-0.01	0.67
Germany	-0.25	0.00*	0.04	0.39	-0.02	0.19
Greece	0.07	0.20	0.13	0.01*	0.05	0.24
Iceland	0.02	0.66	0.06	0.26	0.03	0.56
Ireland	0.15	0.00*	0.14	0.00*	0.07	0.08***
Italy	-0.03	0.48	0.06	0.17	0.00	1.00
Luxembourg	0.12	0.02**	0.10	0.06***	0.05	0.29
Netherlands	-0.12	0.01*	0.07	0.12	-0.01	0.71
Norway	0.15	0.00*	0.06	0.23	-0.02	0.61
Spain	-0.04	0.44	0.07	0.14	0.00	0.99
Sweden	-0.05	0.29	0.08	0.07***	0.01	0.80
Switzerland	-0.04	0.37	0.11	0.02**	0.03	0.25
UK	-0.28	0.89	0.08	0.10	0.00	0.86

*1% significance level, **5% significance level, ***10% significance level. The values appearing as significant identify contagion effects in the markets derived from the US stock markets (Dow Jones Industrials, S&P500).

Diagram 9: European Stock Markets-Dow Jones Industrials (results from model 3)

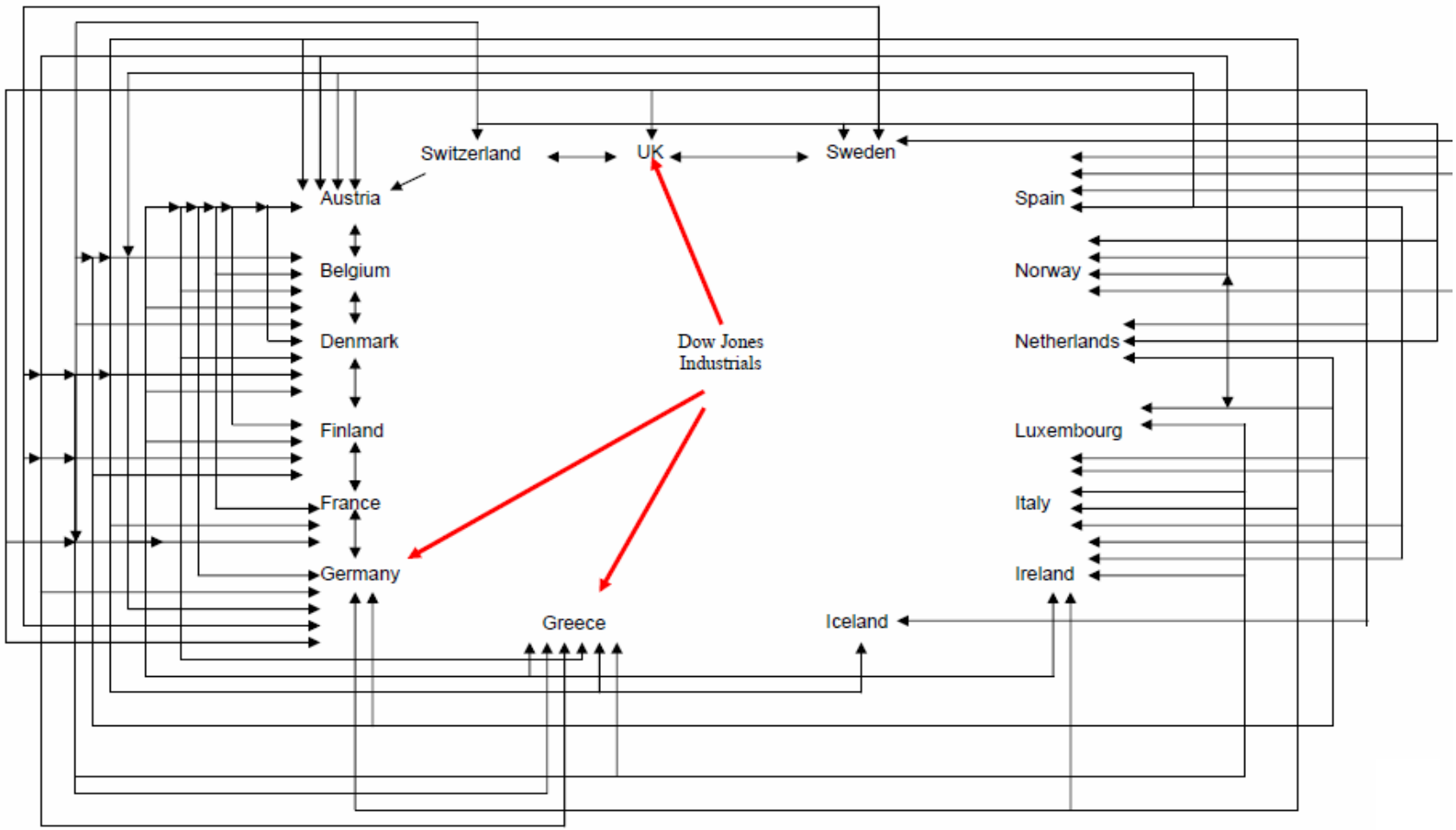

Table 10: Contagious Effects in European Stock Markets-S&P 500

Countries	Model 1		Model 2		Model 3	
	γ3	p-values	θ2	p-values	φ2	p-values
Austria	7.20	0.00*	0.09	0.05**	0.00	0.93
Belgium	-2.46	0.22	0.13	0.01*	0.04	0.09***
Denmark	2.03	0.34	0.13	0.01*	0.03	0.37
Finland	-3.64	0.08***	0.08	0.08***	0.00	0.97
France	-5.25	0.01*	0.07	0.10	-0.01	0.67
Germany	-11.18	0.00*	0.04	0.31	-0.02	0.19
Greece	2.13	0.34	0.12	0.01*	0.03	0.43
Iceland	0.43	0.85	0.05	0.29	0.02	0.64
Ireland	6.20	0.00*	0.15	0.00*	0.07	0.07***
Italy	-1.94	0.33	0.07	0.15	0.00	0.92
Luxembourg	5.29	0.02**	0.11	0.03**	0.06	0.21
Netherlands	-5.25	0.01*	0.08	0.08***	-0.01	0.75
Norway	6.16	0.00*	0.07	0.15	-0.02	0.68
Spain	-2.27	0.25	0.07	0.11	0.00	0.94
Sweden	-2.43	0.23	0.09	0.05**	0.01	0.81
Switzerland	-2.00	0.33	0.12	0.01*	0.04	0.14
UK	0.01	0.87	0.08	0.08	-0.01	0.69

*1% significance level, **5% significance level, ***10% significance level. The values appearing as significant identify contagion effects in the markets derived from the US stock markets (Dow Jones Industrials, S&P500).
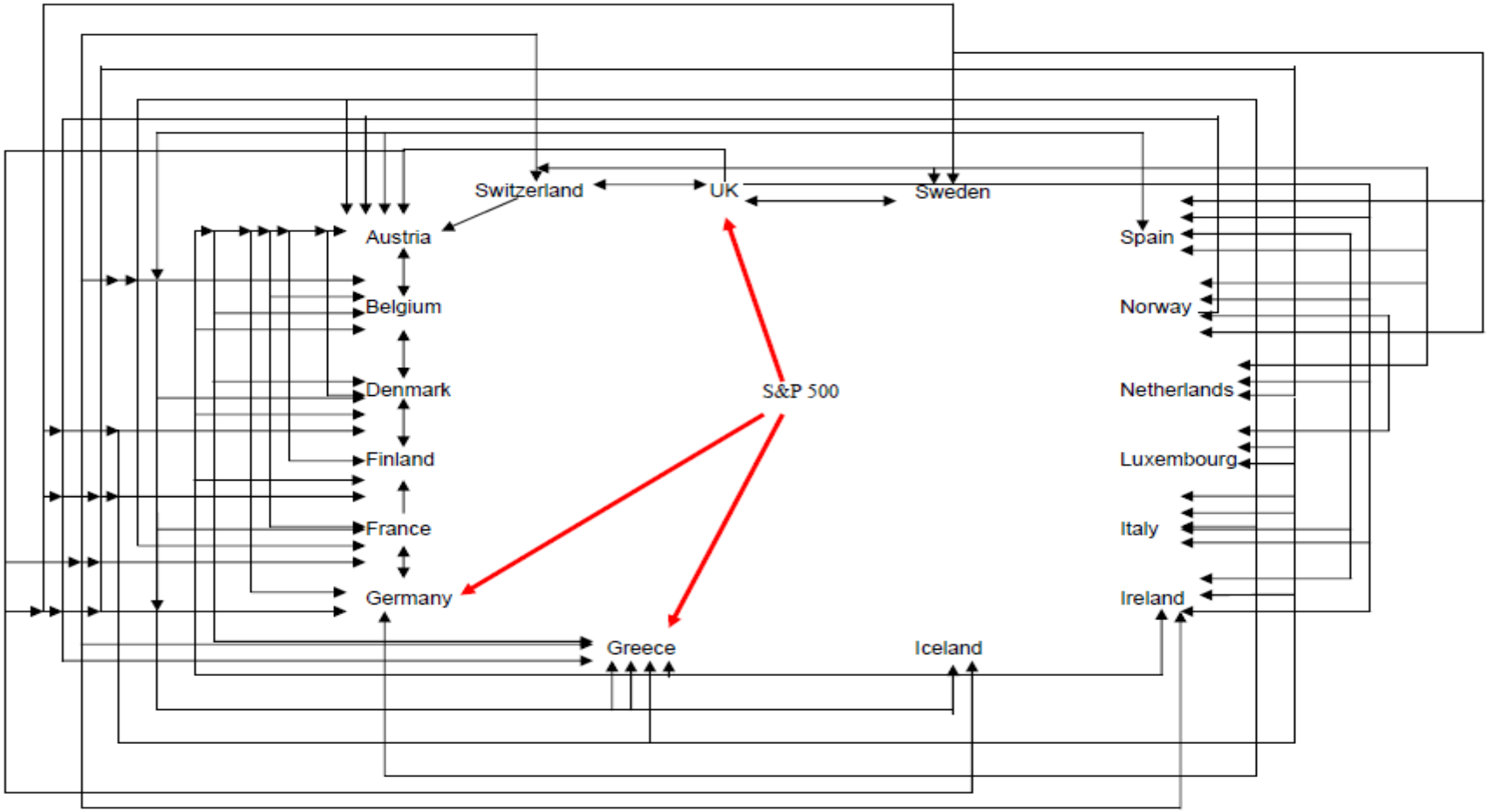
Diagram 10: European Stock Markets-S&P 500 (results from model 3)