Dublin Institute of Technology
ARROW@DIT

Other resources

School of Mechanical and Transport Engineering

2009-05-01

Combined heat and power in the Irish market

Barry Cullen
Dublin Institute of Technology, barry.cullen@dit.ie

Jim McGovern
Dublin Institute of Technology, jim.mcgovern@dit.ie

Follow this and additional works at: http://arrow.dit.ie/engschmecoth

Part of the Civil and Environmental Engineering Commons

Recommended Citation
Cullen, Barry and McGovern, Jim: Combined heat and power in the Irish market. Poster relating to ongoing doctoral research.

This Other is brought to you for free and open access by the School of Mechanical and Transport Engineering at ARROW@DIT. It has been accepted for inclusion in Other resources by an authorized administrator of ARROW@DIT. For more information, please contact yvonne.desmond@dit.ie, arrow.admin@dit.ie.

This work is licensed under a Creative Commons Attribution-Noncommercial-Share Alike 3.0 License.

Combined Heat and Power in the Irish Market

Barry Cullen, Prof. Jim McGovern
Department of Mechanical Engineering

1. Combined Heat and Power Generation

Combined Heat and Power (CHP) is a thermal process that produces electricity and heat simultaneously from a single source of fuel [1]. Utilisation of Combined Generation offers fuel cost savings through the recovery of a significantly higher portion of the available energy than other generation technologies. Heat that would typically be lost from a traditional plant is recovered for space or process heating, thus giving these units high total plant efficiencies. Various configurations are possible, including use of turbines, reciprocating internal combustion engines or Stirling cycle engines as the prime movers.

2. Barriers to the Implementation of CHP in Ireland

The primary barrier to implementation of CHP systems in Ireland is often the unsuitability of the demand profile of prospective sites. CHP depends upon coincident demand for thermal and electrical power. Although Combined Generation offers significant improvements in total plant efficiency, the energy balance of heat-engine driven Combined Generation plants generally favours production of heat over electricity. In certain situations this can limit the size of possible Combined Generators or negate their use completely. If at least a significant portion of the heat produced cannot be accepted by the site load, then use of such plant becomes uneconomic. Typically, those sites with steady coincident thermal and electrical demand benefit most from CHP application – industrial sites with large process heat and electrical demand, hospitals, and leisure resorts with swimming pools are typical examples of suitable sites for CHP generation. Less suited examples include domestic applications and office/commercial premises [2].

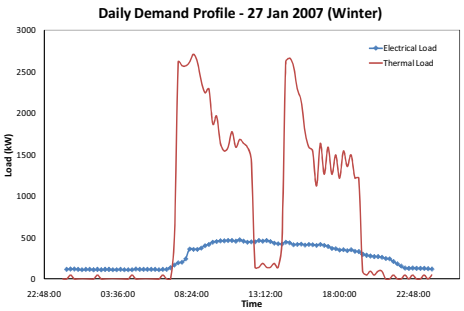

Figure 1: Sample Load Profile – Winter Day

3. Government Incentives for CHP Deployment

€65 million was allocated by the minister for finance in the 2005 budget to be allotted over the period 2006 – 2010 with the express purpose given to "launch several innovative grant schemes relating to biofuels, combined heat and power, biomass commercial heaters and domestic renewable heat grants".

The Sustainable Energy Ireland (SEI) CHP Deployment Programme provides grant support to assist the deployment of small-scale (<1MWe) fossil-fired CHP and biomass (anaerobic digestion and wood residue) CHP systems[3].

The CHP grant scheme provides for 40% funding for CHP feasibility studies and capital investment funding of 30% on eligible CHP projects. To date, total installed capacity due to the scheme is 5.8MW$_e$ (9 MW$_t$) in thirty five sites nationwide, with the consequent average unit capacity being 168kWe (257kWt) [3].

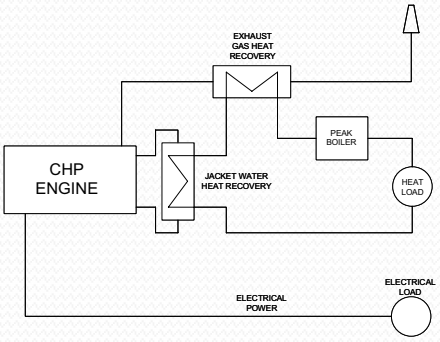

Figure 2: Schematic of CHP System

4. Energy Balance and Energy Quality

CHP units are generally acknowledged as high efficiency plant options as they are often capable of recovering as much as 90% of the LHV of the combusted fuel—typically natural gas in Irish applications. This fact does not represent all the pertinent issues however. Energy quantity and energy quality are distinct concepts—from a thermodynamic viewpoint, work is of a higher value than heat. In terms of a CHP unit, the work output is converted to electrical power. The inherent higher value of the work output is evidenced by the higher unit charge (€/kWh) of electrical power when compared to heating fuels such as natural gas. It is therefore notable that a CHP unit with an energy balance biased towards electrical output may be of greater economic value than one with a balance biased toward thermal output.

5. Current CHP System Development Work in Dublin Institute of Technology

Some current work ongoing in the Dublin Institute of Technology is aimed at investigating the possibility of increasing the electrical power output of a natural-gas-fired Otto cycle CHP engine by using a Stirling cycle engine as a heat recovery device on the exhaust stream of the engine. Several areas of investigation are critical—thermodynamic modelling of the Otto cycle and Stirling cycle engines, Optimisation of the combined engine system and techno-economic modelling of the combined system—to fully investigate the application of the system.

References

1.Oh, Si-Doek, Hoo-Suk Oh, and Ho-Young Kwak, *Economic Evaluation for Adoption of Cogeneration System.* Applied Energy 2007,84: p. 266 - 278
2.Cullen, Barry and Jim McGovern. *The Quest for More Efficient Industrial Engines: A Review of Current Industrial Engine Development and Applications*. in *ASME Power*. 2007. San Antonio, TX: ASME.
3.*Combined Heat and Power Deployment Programme*. 2006 [cited; Available from: http://www.sei.ie/Grants/CHP/.