Dublin Institute of Technology
ARROW@DIT

Articles | School of Electrical and Electronic Engineering

1992-01-01

All Optical Synchronisation with Frequency Division using a Self Pulsating Laser Diode

Gerald Farrell
Dublin Institute of Technology, gerald.farrell@dit.ie

P. Phelan

Joe Hegarty

Follow this and additional works at: http://arrow.dit.ie/engscheceart

Part of the Electrical and Computer Engineering Commons

Recommended Citation

Farrell, G., Phelan, P., Hegarty, J.: All optical synchronisation with frequency division using a self pulsating laser diode. Electronic Letters, Vol. 28, no. 8., pp.738-39. 1992.

This Article is brought to you for free and open access by the School of Electrical and Electronic Engineering at ARROW@DIT. It has been accepted for inclusion in Articles by an authorized administrator of ARROW@DIT. For more information, please contact yvonne.desmond@dit.ie, arrow.admin@dit.ie.

This work is licensed under a Creative Commons Attribution-Noncommercial-Share Alike 3.0 License

Acknowledgments: We gratefully acknowledge stimulating discussions with K. L. Walker, A. E. White, M. A. Pollack, J. Stone, P. D. Magill and T. L. Koch

13th May 1992

J. L. Zyskind and J. W. Sulhoff (*AT&T Bell Laboratories, Crawford Hill Laboratory, Holmdel, New Jersey 07733, USA*)

V. Mizrahi and D. J. DiGiovanni (*AT&T Bell Laboratories, Murray Hill, New Jersey 07974, USA*)

References

1 MAEDA, M. W., PATEL, J. S., SMITH, D. A., LIN, C., SAIFI, M. A., and VON LEHMAN, A.: 'An electronically tunable fiber laser with a liquid-crystal etalon filter as the wavelength-tuning element', *IEEE Photonics Technol. Lett.*, 1990, **2**, pp. 787–789

2 IWATSUKI, K., OKAMURA, H., and SARUWATARI, M.: 'Wavelength-tunable single frequency and single-polarization Er-doped fibre ring-laser with 1·4 kHz linewidth', *Electron. Lett.*, 1990, **26**, pp. 2033–2034

3 ZYSKIND, J. L., SULHOFF, J. W., STONE, J., DIGIOVANNI, D. J., STULZ, L. W., PRESBY, H. M., PICCIRILLI, A., and PRAMAYON, P. E.: 'Electrically tunable, diode-pumped erbium-doped fibre ring laser with fibre Fabry–Perot etalon', *Electron. Lett.*, 1991, **27**, pp. 1950–1951

4 ZYSKIND, J. L., SULHOFF, J. W., SUN, J., STONE, J., STULZ, L. W., HARVEY, G. T., DIGIOVANNI, D. J., PRESBY, H. M., PICCIRILLI, A., KOREN, U., and JOPSON, R. M.: 'Single mode diode-pumped tunable erbium-doped fibre laser with linewidth less than 5·5 kHz', *Electron. Lett.*, 1991, **27**, pp. 2148–2149

5 PARK, N., DAWSON, J. W., and VAHALA, K. J.: 'All fiber low threshold, widely tunable single-frequency, erbium-doped fibre ring laser with tandem fiber Fabry–Perot filter', *Appl. Phys. Lett.*, 1991, **59**, pp. 2369–2371

6 BALL, G. W., MOREY, W. W., and GLENN, W. H.: 'Standing-wave monomode erbium fiber laser', *IEEE Photonics Technol. Lett.*, 1991, **3**, pp. 613–615

7 BALL, G. A., and MOREY, W. W.: 'Continuously tunable single-mode erbium fiber laser', *Opt. Lett.*, 1992, **17**, pp. 420–422

8 MELTZ, G., MOREY, W. W., and GLENN, W. H.: 'Formation of Bragg gratings in optical fibers by a transverse holographic method', *Opt. Lett.*, 1989, **14**, pp. 823–825

9 BALL, G. A., and MOREY, W. W.: 'Narrow-linewidth fiber laser with integrated master oscillator-power amplifier'. Dig. Conf. on Optical Fiber Communication, 1992, p. 97

ALL-OPTICAL CLOCK DISTRIBUTION WITH SYNCHRONOUS FREQUENCY DIVISION AND MULTIPLICATION

G. Farrell, P. Phelan and J. Hegarty

Indexing terms: Clocks, Optical communications, Lasers

A master optical clock from a mode locked laser is distributed to two slave twin section lasers. One slave laser divides the optical modulation frequency by 2, the other slave laser multiplies the frequency by 2. It is also possible to vary the multiplication–division ratio in a slave laser using only DC control of the absorber of the twin section laser.

Introduction: The distribution of a master clock to a number of slave circuits is an important function in large computers and communications switching systems. It has been shown [1] that clock distribution by electronic means places a major limitation on the ultimate operating speed of a system. The use of optical clock distribution has been proposed [1] as an alternative because it offers low loss, high bandwidth and a large fanout capability. The use of a mode locked laser as an optical clock has also been demonstrated [2]. A mode locked laser is a very suitable clock source because the pulses are of a very short duration and possess very low jitter. In many systems a range of different but synchronous clock frequencies are required. The use of electronic division or multiplication of a distributed optical clock negates many of the advantages of all-optical clock distribution.

Twin section laser diodes have been shown to be useful for all-optical timing extraction [3] and more recently for all-optical synchronisation with frequency division for sinusoidal signals [4] and for mode locked signals [5]. Frequency division and multiplication are achieved by overlapping the appropriate harmonics of the source signal and the selfpulsating signal. The relationship between the source frequency and the selfpulsating frequency can be an integer or a rational fraction.

In this Letter we demonstrate for the first time all-optical clock distribution with all-optical frequency division and multiplication of the distributed clock. To achieve this a master optical clock is distributed to two twin section selfpulsating slave lasers. One slave laser divides the frequency of the optical clock by a fixed value of two and the other slave laser is used to multiply the optical clock frequency by two. In addition we demonstrate that by DC control of the absorber of the slave laser the division/multiplication ratio can be varied.

Experimental setup: Fig. 1 shows the experimental setup for optical clock distribution. In this experiment a master optical clock is distributed to two slave lasers. The source of optical

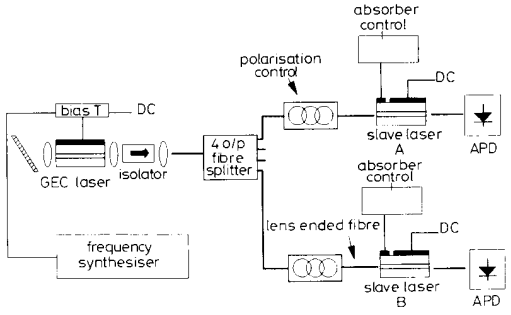

Fig. 1 *Experimental setup*

clock signals is a tunable grating external cavity laser which is modelocked by an RF signal from a frequency synthesiser. The grating laser is operated at a bias current of 21·4 mA modulated at 541·7 MHz at +22 dBm. The pulse width measured on a 20 GHz photodiode was less than 120 ps.

This master clock is distributed to the two slave lasers using singlemode fibre and two outputs of a four output fibre splitter. Each of the slave lasers A and B shown in Fig. 1 is a twin section InGaAsP BH device with a length of 500 μm and a 4 : 1 gain to absorber section length ratio. The slave lasers are operated within their selfpulsation regime, described previously [6]. The outputs of the slave lasers are monitored on an avalanche photodiode with a bandwidth greater than 1·5 GHz. All of the lasers in the system setup were temperature controlled to within $\pm 0{\cdot}1$°C.

Operation: The master laser operates at 541·7 MHz with an average output power of 172 μW at a wavelength of approximately 1612·8 nm. This master signal is shown in Fig. 2*a*, where the pulse duration shown is limited by the bandwidth of the avalanche photodiode used. With the master optical clock blocked the selfpulsation frequency of slave laser A is set to just below 270 MHz using an absorber voltage of 0·250 V. The frequency of slave laser B is set to just below 1083 MHz using an absorber voltage of 0·366 V. The gain section current of both slave lasers is set to 90 mA.

The master optical clock is then used to injection lock both slave lasers. Synchronisation also occurs and in the case of slave laser A the selfpulsation frequency changes to exactly 270·85 MHz providing frequency division by two. For slave laser B the frequency changes to exactly 1083·4 MHz when synchronisation occurs providing frequency multiplication by two. The outputs of slave lasers A and B are shown in Fig. 2*b* and *c*, respectively. In both cases the oscilloscope is triggered by a signal from the frequency synthesiser, demonstrating that synchronisation takes place in time. The degree of synchronisation can also be checked using a spectrum analyser, as

Authorized licensed use limited to: DUBLIN INSTITUTE OF TECHNOLOGY. Downloaded on March 19, 2009 at 07:18 from IEEE Xplore. Restrictions apply.

reported previously [4]. The noise floor relative to the peak level of the synchronised fundamental component of the self-pulsating laser output is greater than 38 dB for both slave lasers.

It is also possible under DC absorber control to vary the multiplication and division ratio of the synchronised slave clock. This is achieved by changing only the DC absorber voltage. The results for slave laser B are shown in the Table 1. As the absorber voltage is increased, synchronisation occurs between different harmonics of the master signal and the self-pulsation signal. This changes the multiplication–division ratio. In Table 1, the third entry corresponding to an output frequency of 812·55 MHz represents multiplication by a rational fraction, in this case 3/2.

The average injection power into the slave lasers required for synchronisation is approximately 3 μW in each case. Given this low power level a fanout in excess of 50 is possible for an average mode locked laser power of 172 μW. Furthermore the selfpulsating laser also provides a net optical power gain which will make subsequent electronic processing easier. For example when slave laser B is synchronised the average output power is 240 μW, a net gain of 19 dB.

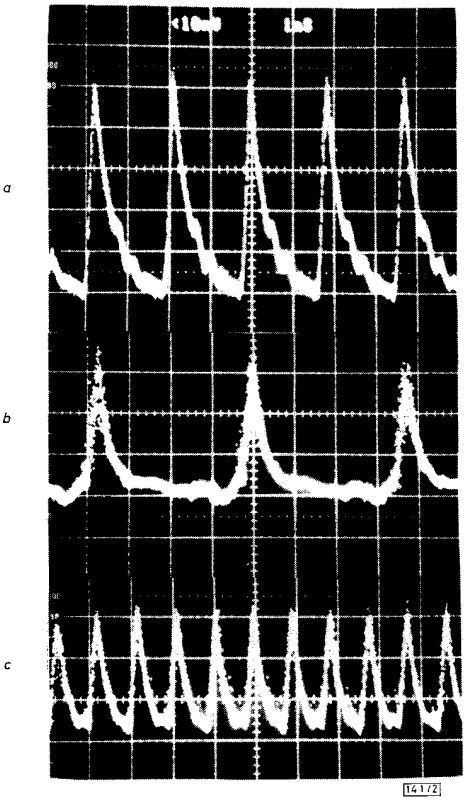

Fig. 2 *Oscillograph showing frequency division and multiplication of master clock*

a Grating external cavity LD output: master clock signal
b Slave LD A output: master clock frequency divided by 2
c Slave LD B output: master clock frequency multiplied by 2

Table 1 ABSORBER DC VOLTAGE CONTROL OF MULTIPLICATION–DIVISION RATIO

Absorber voltage	Synchronised selfpulsation frequency	Multiplication–division ratio
V	MHz	
0·292	270·85	1 : 2
0·317	541·70	1 : 1
0·340	812·55	3 : 2
0·366	1083·40	2 : 1

Conclusion: We have demonstrated for the first time all-optical clock distribution with all-optical frequency division and multiplication using selfpulsating twin section laser diodes with a high fanout value. It is also possible to vary the multiplication–division ratio using DC control only. The self-pulsating lasers also provide optical gain. This technique will be useful in systems where a single master clock must be distributed to a number of slave systems, but where each system requires a synchronous clock of a different frequency.

Acknowledgment: The authors would like to thank M. J. Robertson of British Telecom Laboratories for providing the lasers used in this work and T. Murphy of Aster Ireland for providing the unitary coupler.

27th May 1992

G. Farrell, P. Phelan and J. Hegarty (*Optronics Ireland Research Centre, Physics Department, Trinity College, Dublin 2, Ireland*)

References

1 HARTMAN, D. H.: 'Digital high speed interconnects: a study of the optical alternative', *Opt. Eng.*, 1986, **25**, (1), pp. 1086–1102
2 DELFYETT, P. J., HARTMANN, D. H., and AHMAD, S. Z.: 'Optical clock distribution system using a mode-locked semiconductor laser system', *J. Lightwave Technol.*, 1991, **LT-9**, (12), pp. 1646–1649
3 JINNO, M., and MATSUMOTO, T.: 'Optical retiming regenerator using 1·5 μm multi-electrode DFB LDs', *Electron. Lett.*, 1989, **25**, (20), pp. 1332–1333
4 FARRELL, G., PHELAN, P., and HEGARTY, J.: 'All-optical synchronisation with frequency division using a self pulsating laser diode', *Electron. Lett.*, 1992, **28**, (8), pp. 738–739
5 PHELAN, P., FARRELL, G., and HEGARTY, J.: 'All-optical synchronisation and frequency division of modelocked pulses', to be published in *Photonics Technol. Lett.*, August 1992
6 FARRELL, G., PHELAN, P., and HEGARTY, J.: 'Selfpulsation operating regime for the absorber of twin section laser diode', *Electron. Lett.*, 1991, **27**, (16), pp. 1403–1404

InAlAs/InGaAs HETEROJUNCTION BIPOLAR TRANSISTORS WITH AlAs ETCH-STOP LAYER

C. S. Kyono, S. C. Binari, W. Kruppa, K. Ikossi-Anastasiou, and H. S. Hier

Indexing terms: Bipolar devices, Transistors, Semiconductor devices and materials

A seven monolayer AlAs layer was used as an etch stop at the emitter–base heterojunction of an *Npn* $In_{0.52}Al_{0.48}As/In_{0.53}Ga_{0.47}As$ HBT. The etch-stop HBTs displayed higher DC gain and similar microwave performance when compared to devices without the AlAs layer.

Introduction: Heterojunction bipolar transistors (HBTs), lattice matched to InP, continue to show promise as high-performance devices for analogue, digital, and optoelectronic applications [1]. Thin InGaAs base layers are exploited to reduce transit times and increase operating frequencies [2, 3]. However, exposing a thin InGaAs base beneath an InAlAs emitter is a processing challenge because selective wet chemical etchants, permitting the removal of InAlAs without penetration into the underlying InGaAs, are not available. Recently, Broekaert and Fonstad [4] used a succinic acid, hydrogen peroxide, and ammonium hydroxide (SA) solution for selective etching of both InGaAs and InAlAs over thin (3–10 monolayer) AlAs layers. In this work, we report the application of the AlAs etch stop to InAlAs/InGaAs HBTs. A seven monolayer AlAs layer was placed between an InAlAs

Authorized licensed use limited to: DUBLIN INSTITUTE OF TECHNOLOGY. Downloaded on March 19, 2009 at 07:18 from IEEE Xplore. Restrictions apply.